ASTRO CONTENITORI INDUSTRIALI

SENSOR SSR

Electrical Connection

See Typical Wiring Diagram. Connect lead wires to load circuit, using approved method. ***Caution: See "Specifications" (front page) and "Switch Ratings" (below) before connecting power.***

Typical Wiring Diagram

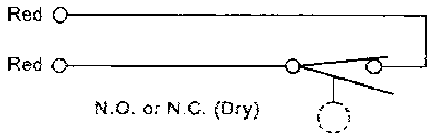

Switch Ratings
- Maximum Resistive Load -

VA	Volts	Amps AC	Amps DC
20 Pilot Duty	0-30	.4	.3
	120	.17	.13
	240	.080	.06

Switch Operation

Depending on the mounting position, the float on these switches caneither rise or lower with the liquid level. By rotating the switch 180°, the switch operation can be Normally Open or Normally Closed. Arrows on exterior of mounting indicate N.O. when point up.

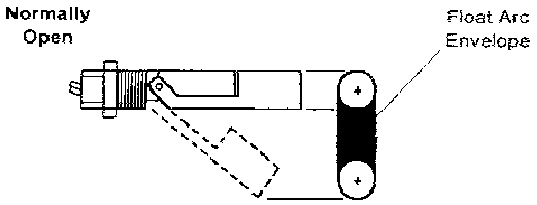

The switch is mounted so that the ***float lowers*** with the liquid level. **The switch is N.O.**

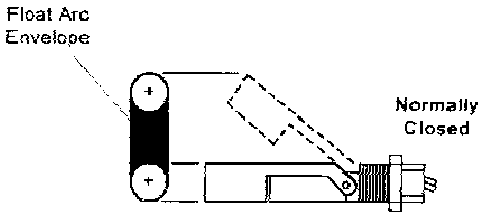

The switch is mounted so that the ***float rises*** with the liquid level. **The switch is N.C.**

Specifications

Materials		Min. Liquid Sp. Gr.	Operating Temperature	Oper. Pres. Max. @ 70° F	Switch* SPST	Lead Wire Gauge
Stem, Mounting and Float	Lead Wire Jacket					
Polypropylene	TPE***	55	-40°F to +225°F(-40°C to +107.2°C)	100 psig	20 VA	#22 AWG

*** Thermoplastic Elastomer Zip Cord

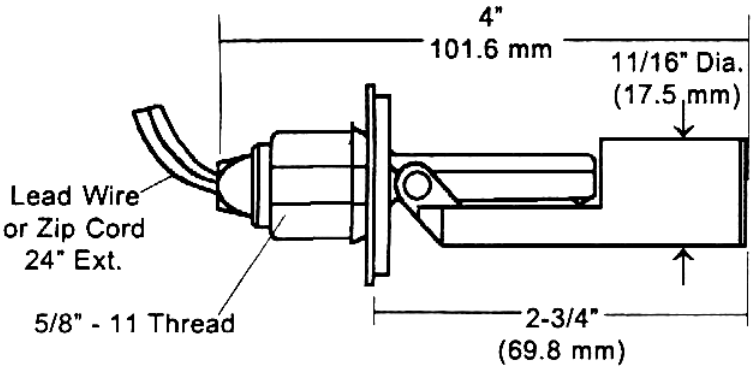

Maintenance

Normally, no maintenance of any kind is required. When excessive contamination is present in the liquid, an occasional wipe-down cleaning is all that is needed.