dis. 6171 AS

TR 6/2 – LT. 500

SFIATO

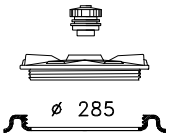

CPM 300 + SF1

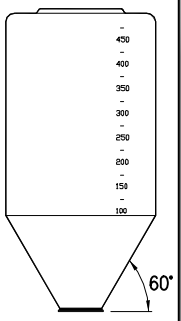

OTRE

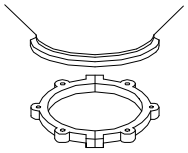

CS 2

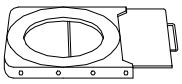

GH 2

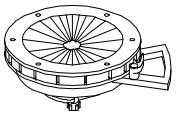

DF 2

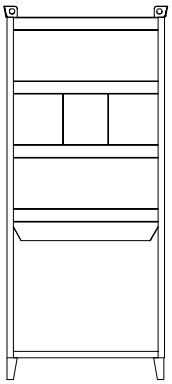

TELAIO

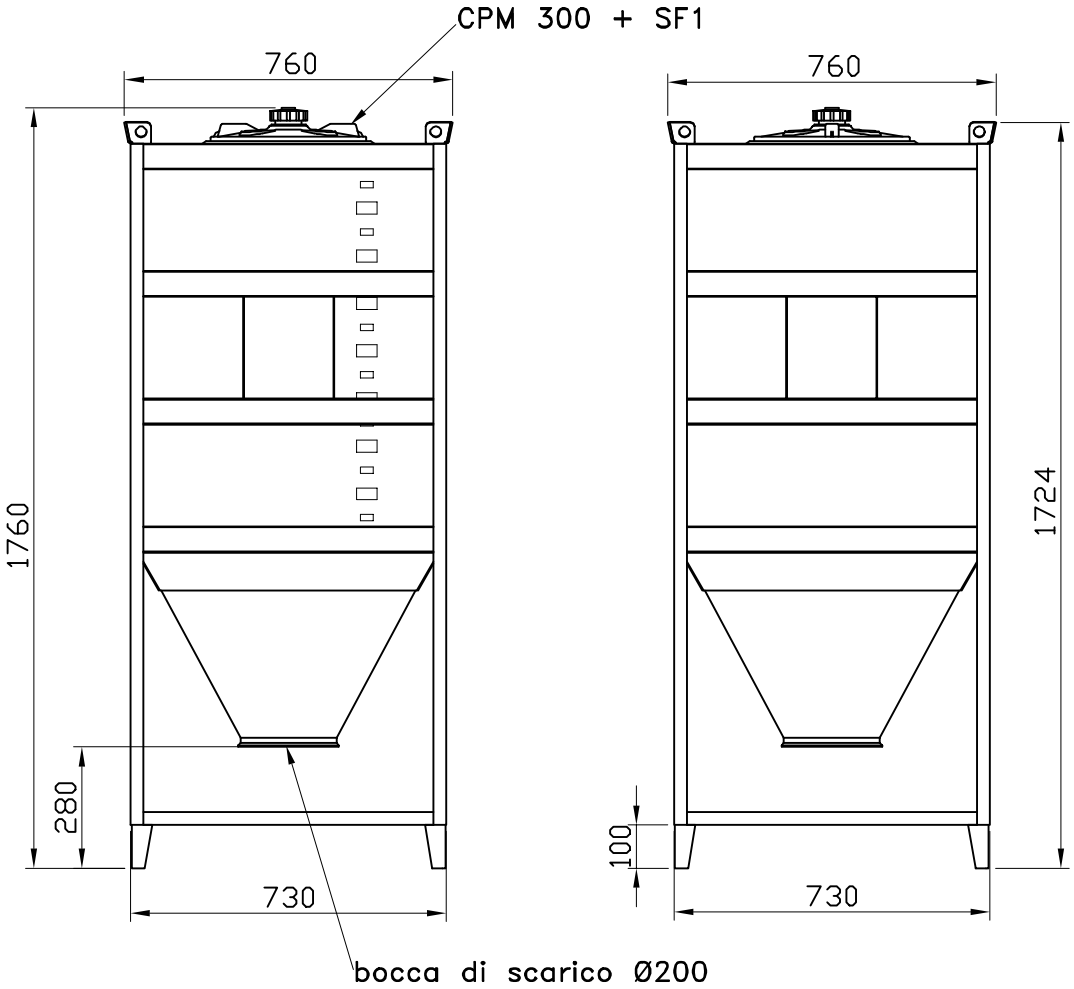

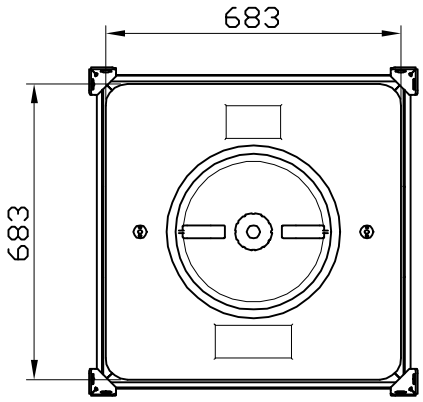

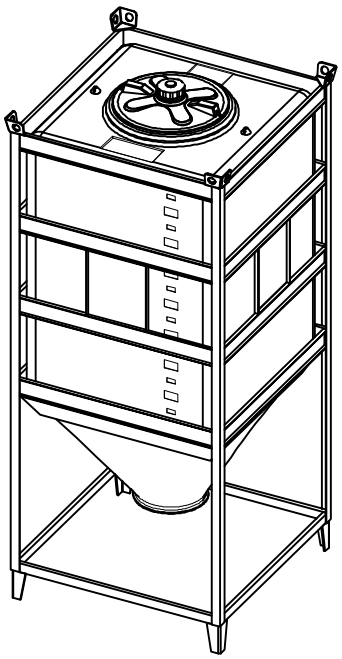

Tel. 035/844060 ASTRO Fax 035/844646

SL – 17.12.09 – ..\-disegni standard\tc\polveri\tr6-2