dis. 6003 AS

TCO 8/4 – LT. 800

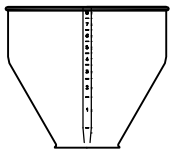

OTRE PE

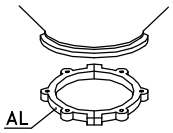

CS 4

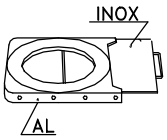

GH 4

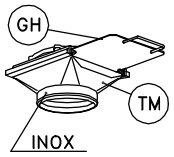

TM 4

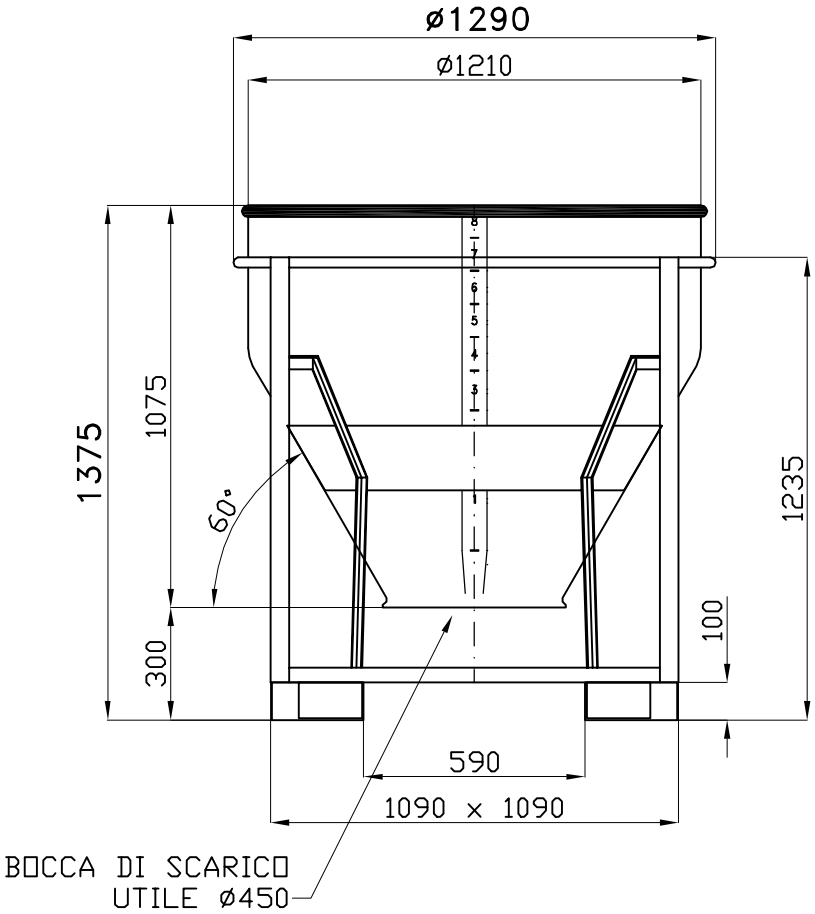

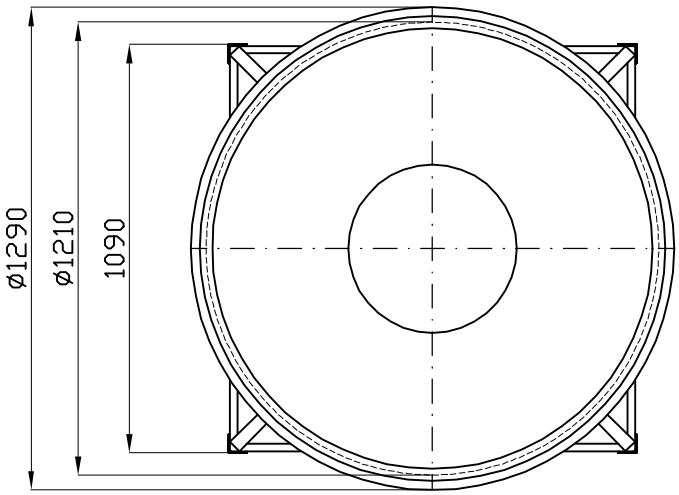

Tel. 035/844060 ASTRO Fax 035/844646

S.L. – 04.06.09 – ..\disegni\-disegni std\tco\polveri\a8_4