dis. 6002 AS

TCO 8/3 – LT. 800

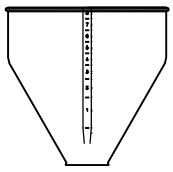

OTRE PE

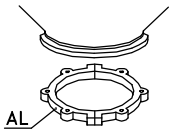

CS 3

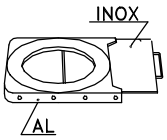

GH 3

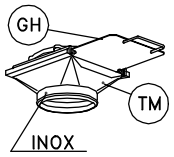

TM 3

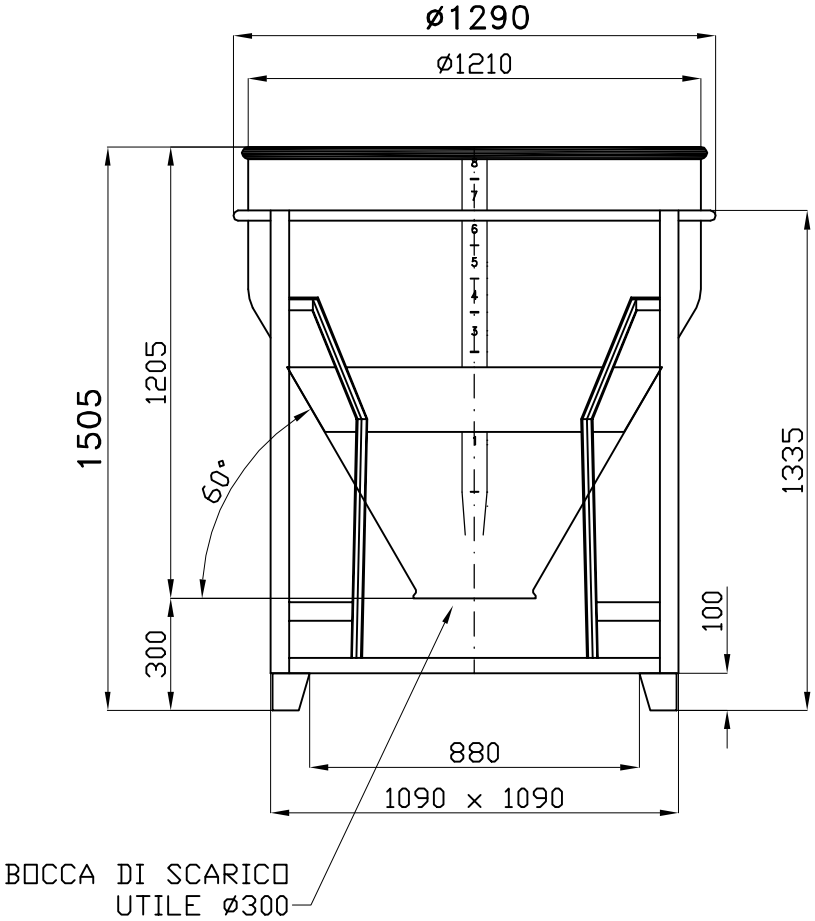

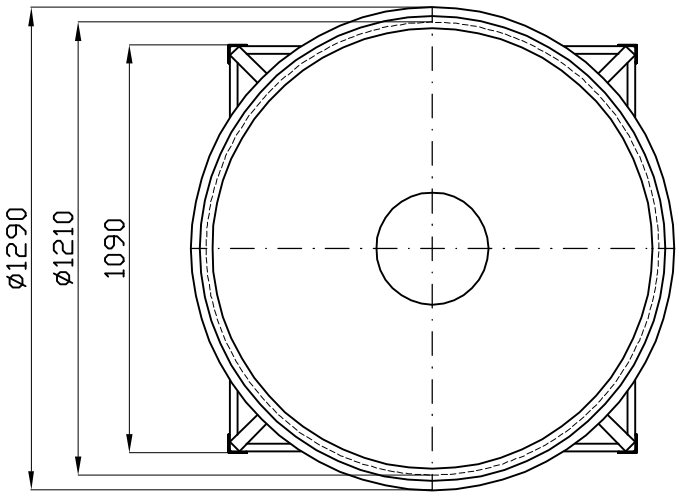

Tel. 035/844060 ASTRO Fax 035/844646

S.L. – 04.06.09 – ..\disegni\-disegni std\tco\polveri\a8_3