S.L. - 03.06.09 - ..\disegni\-disegni std\tco\polveri\a11_3

dis. 6000 AS

TCO 11/3 - LT. 1.000

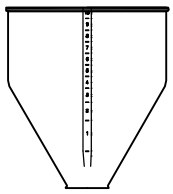

OTRE PE

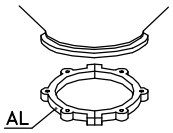

CS 3

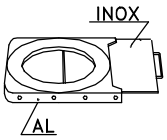

GH 3

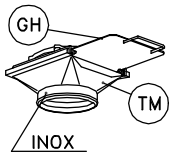

TM 3

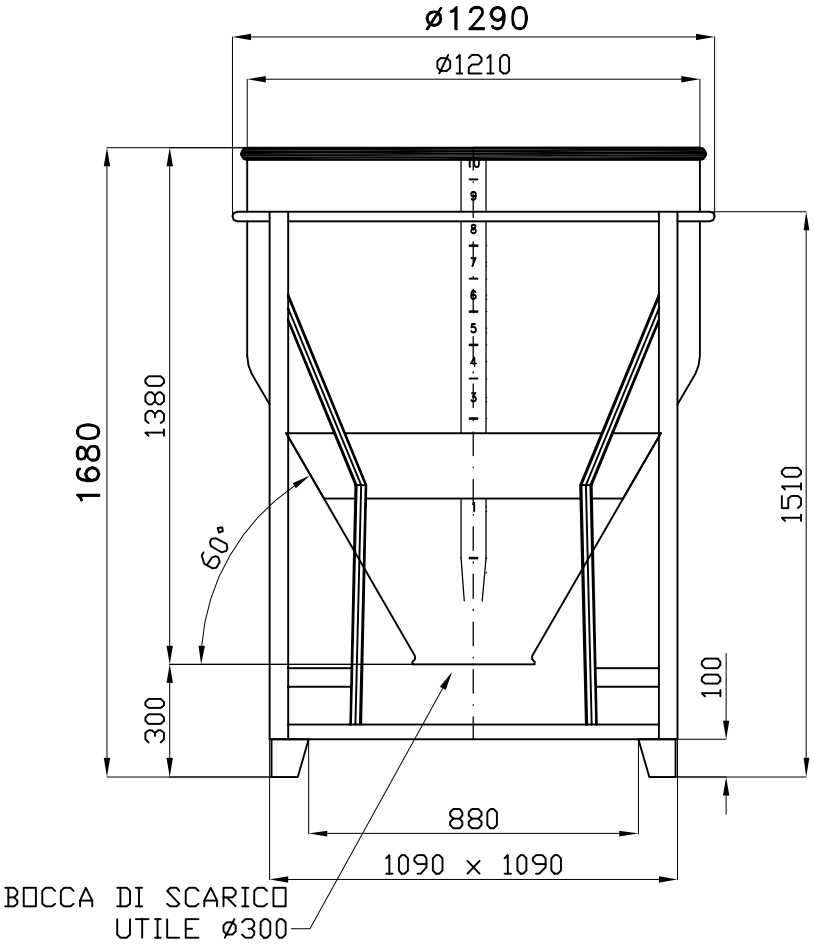

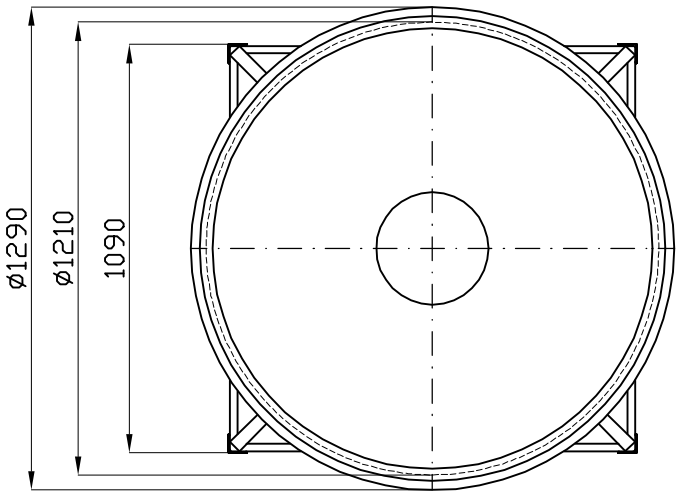

Tel. 035/844060 ASTRO Fax 035/844646