S.L. - 03.06.09 - ..\disegni\-disegni std\tco\polveri\a16_4

dis. 5999 AS

TCO 16/4 - LT. 1.400

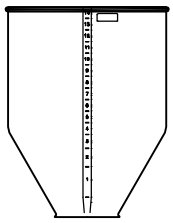

OTRE PE

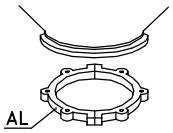

CS 4

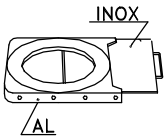

GH 4

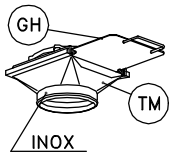

TM 4

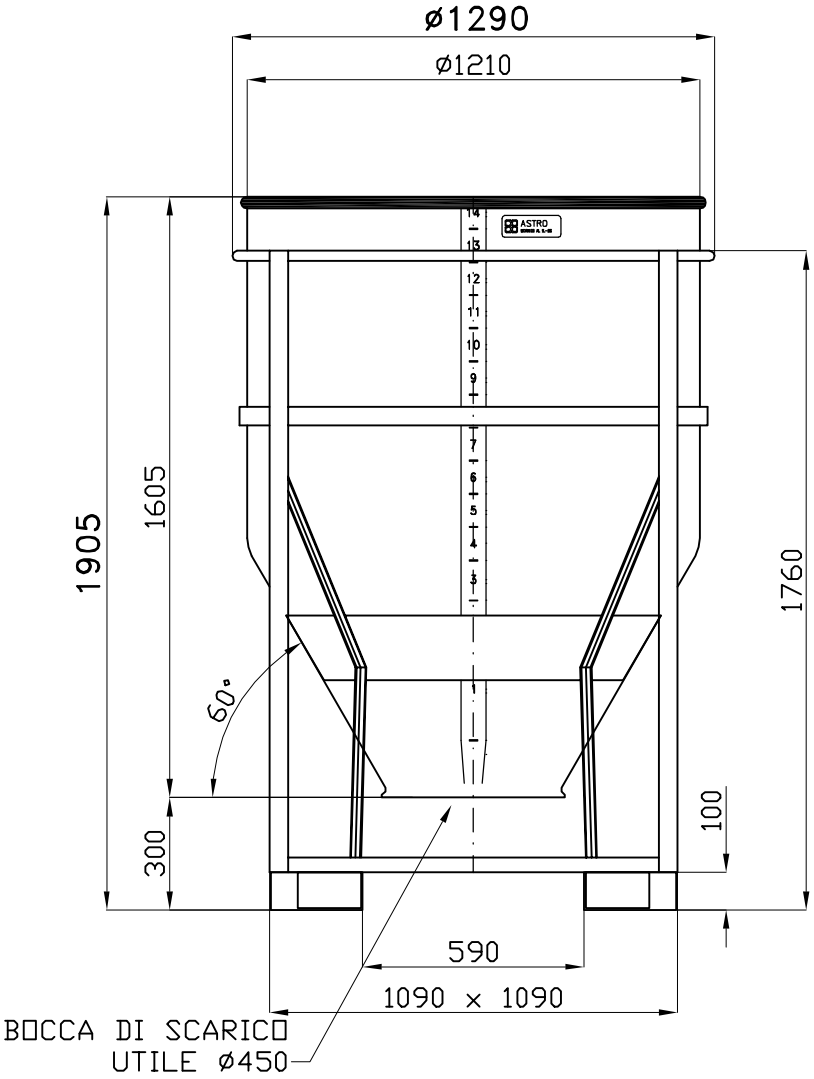

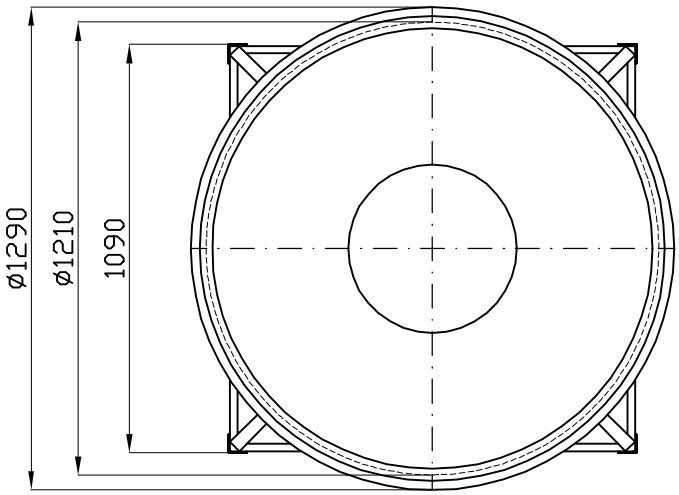

Tel. 035/844060 ASTRO Fax 035/844646