S.L. - 03.06.09 - ..\disegni\-disegni std\tco\liquidi\a11_2

dis. 5996 AS

TCO 11/2 - LT. 1000

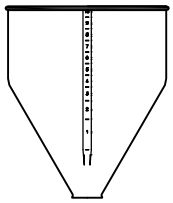

OTRE PE

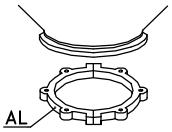

CS 2

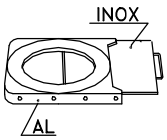

GH 2

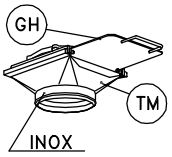

TM 2

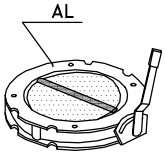

V2FS

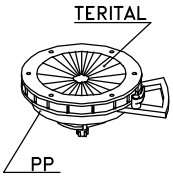

DF 2

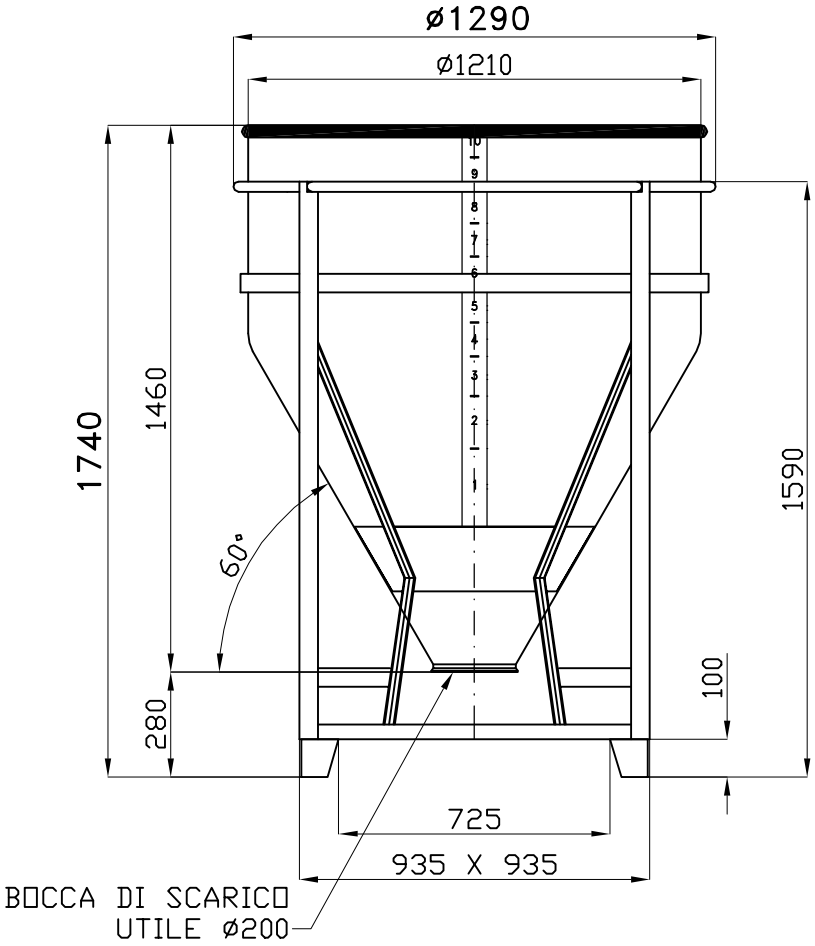

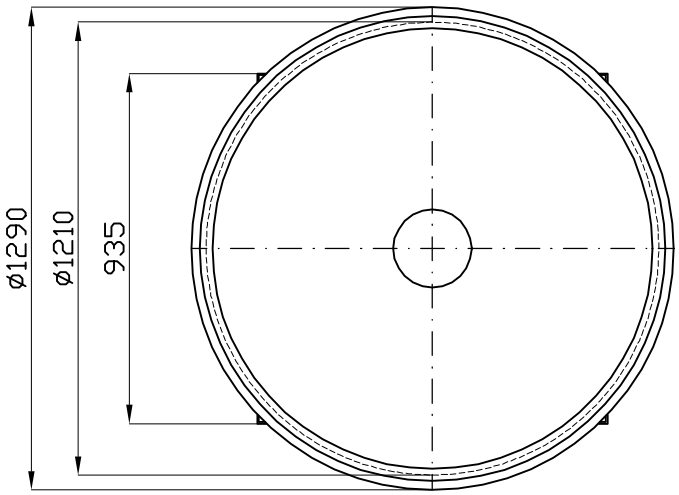

Tel. 035/844060 ASTRO Fax 035/844646