S.L. - 03.06.09 - ..\disegni\-disegni std\tco\liquidi\a22_4

dis. 5994 AS

TCO 22/4 - LT. 1.900

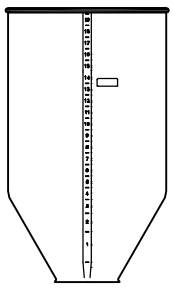

OTRE PE

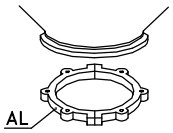

CS 4

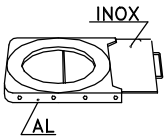

GH 4

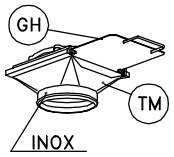

TM 4

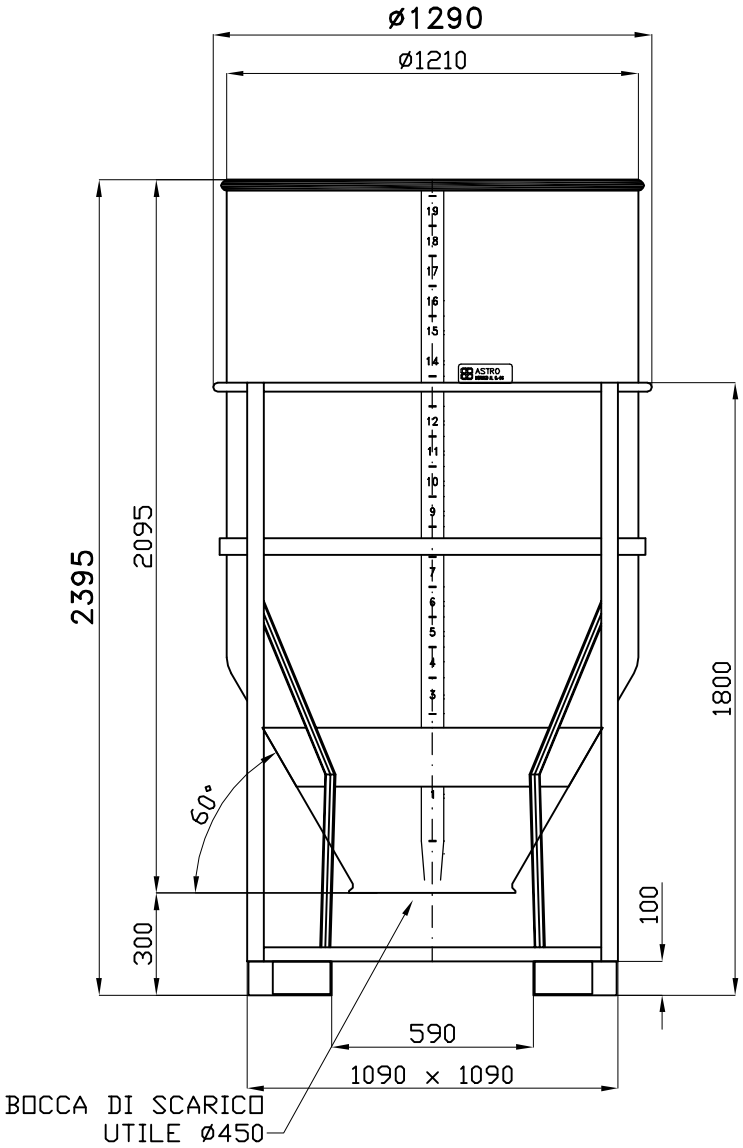

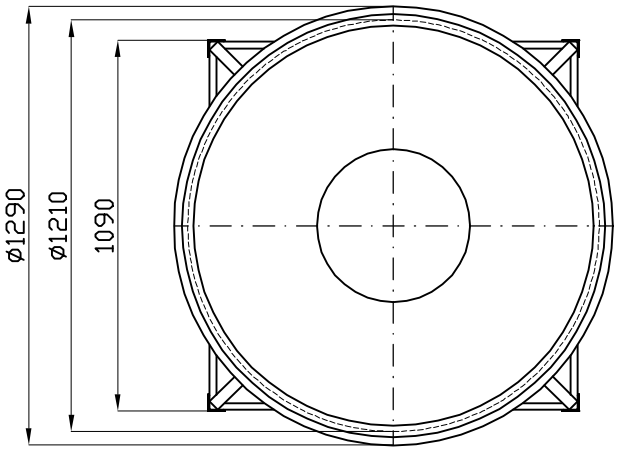

Tel. 035/844060 ASTRO Fax 035/844646