S.L. - 17.07.08 - ..\disegni\-disegni std\tco\liquidi\g22_2

dis. 5767 AS

TCO 22/2 - LT. 1.900

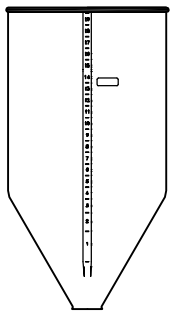

OTRE PE

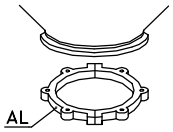

CS 2

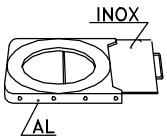

GH 2

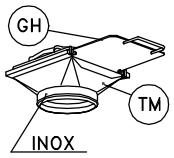

TM 2

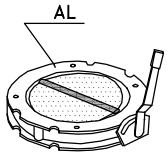

V2FS

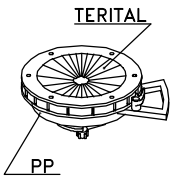

DF 2

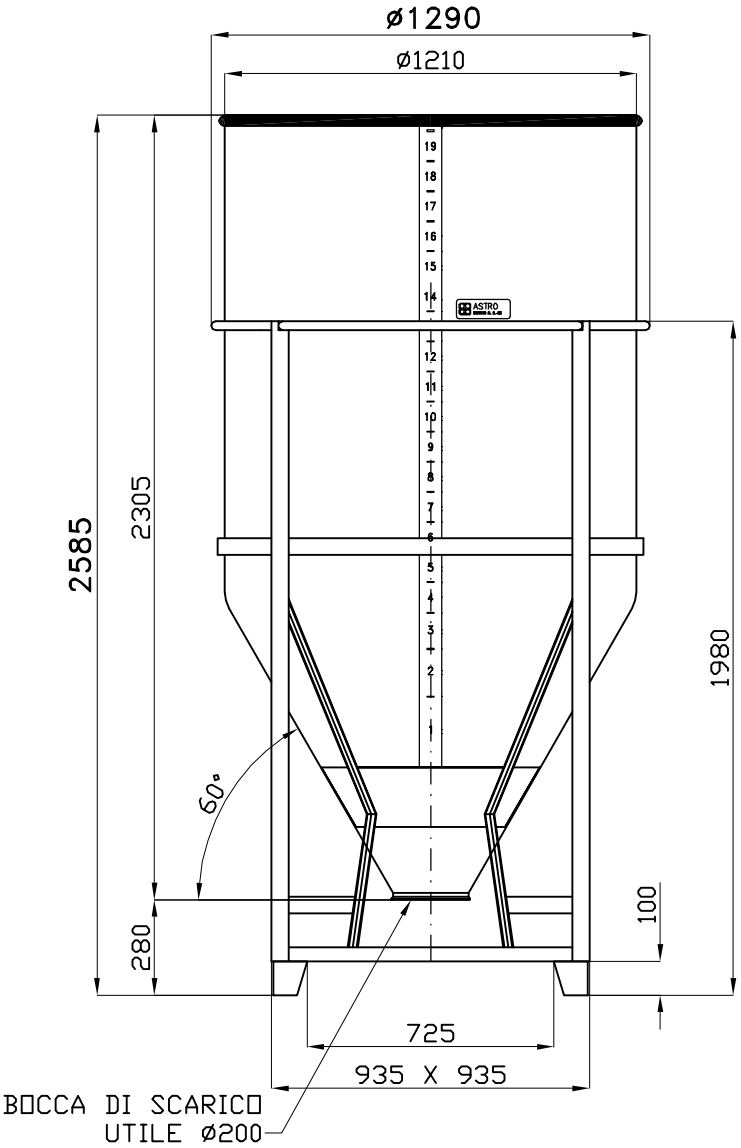

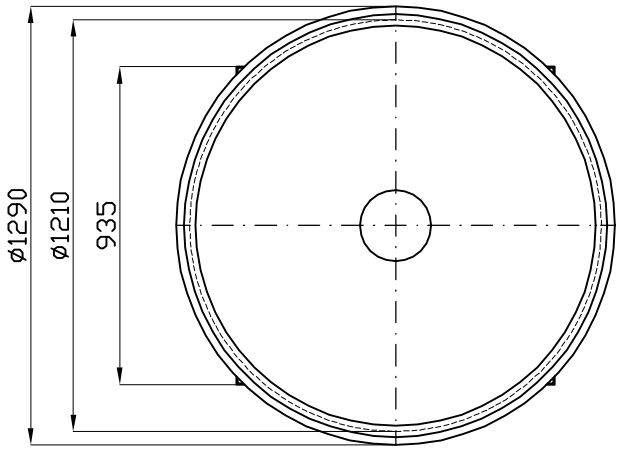

Tel. 035/844060 ASTRO Fax 035/844646