dis. 5618/01 AS

TC 11/3 – LT. 1.080

CPF 410 + SF1

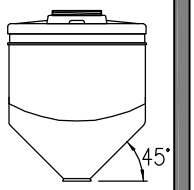

OTRE

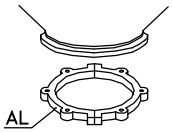

CS 3

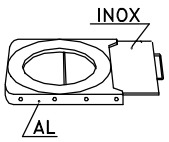

GH 3

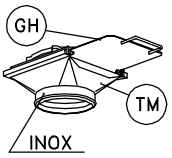

TM 3

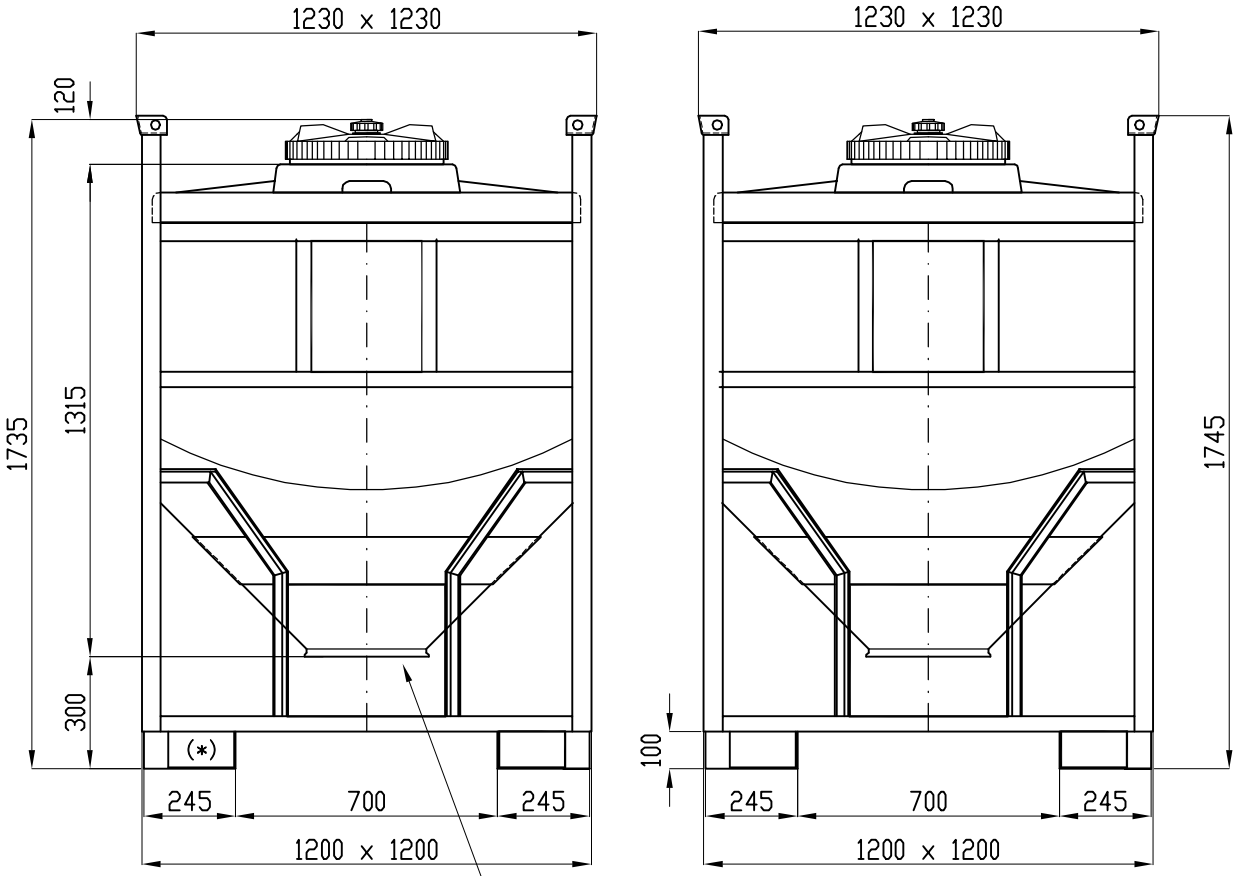

BOCCA di SCARICO ø 300

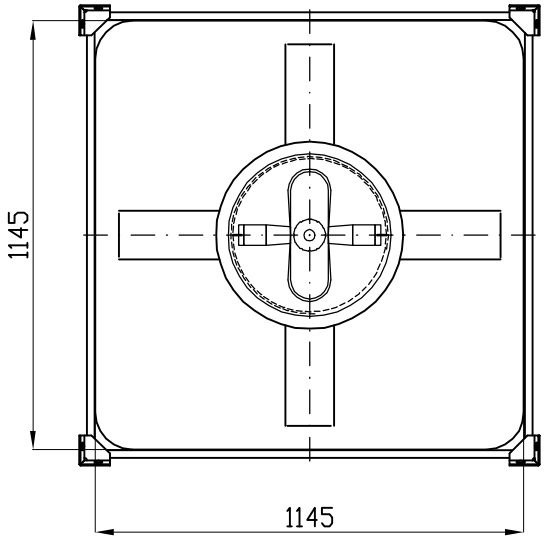

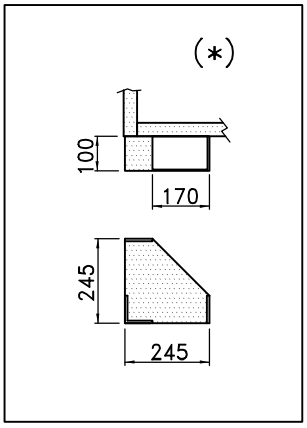

SL – 06.03.08 – ..\disegni\dis std\tc\polveri\a-11-3

01: SL – 22.03.10 – piastre appoggio facile

Tel. 035/844060 ASTRO Fax 035/844646