M.M. - tco\a103_2

dis. 5304 AS

TCO 103/2 - LT. 10.000

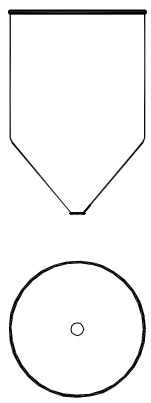

OTRE PE

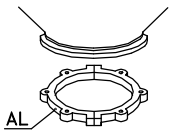

CS 2

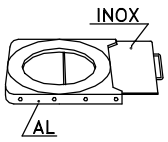

GH 2

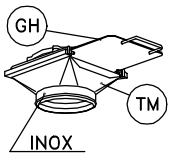

TM 2

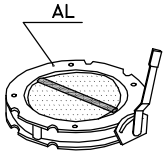

V2FS

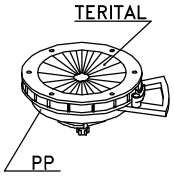

DF 2

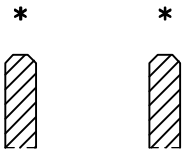

Inforcamento
a vuoto

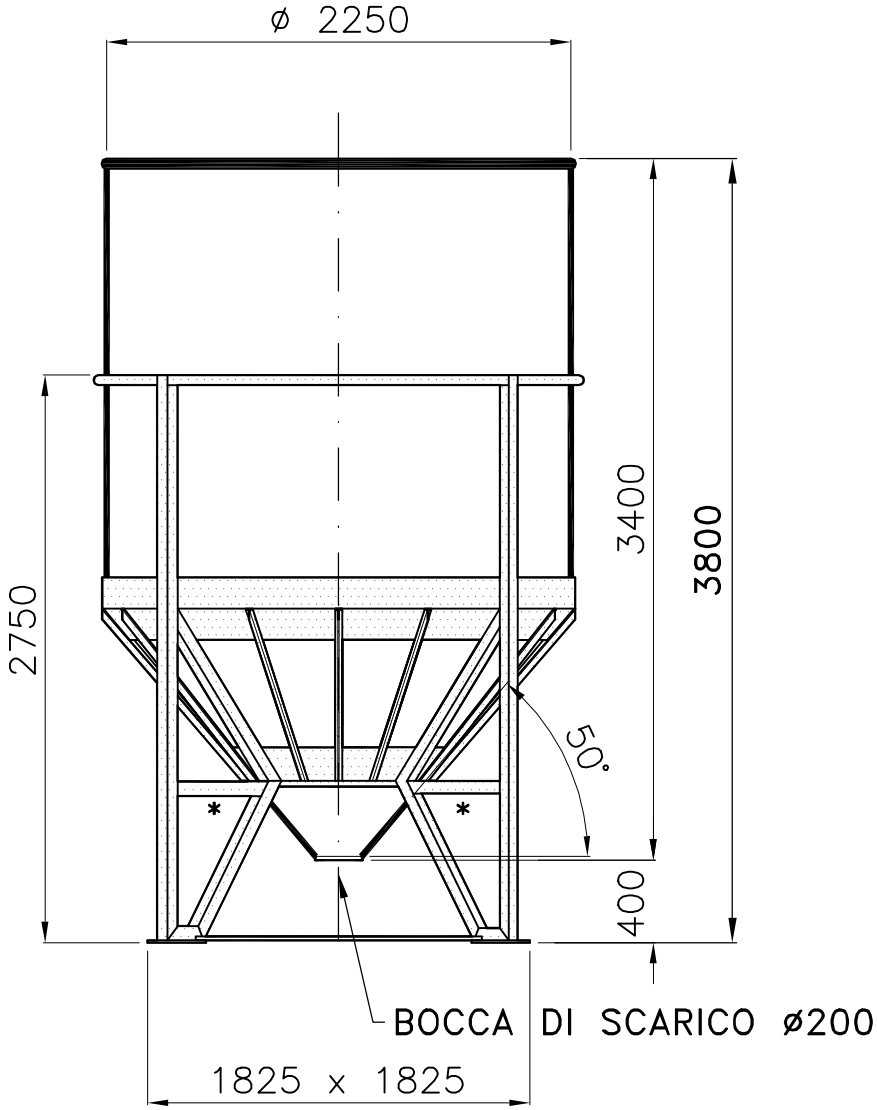

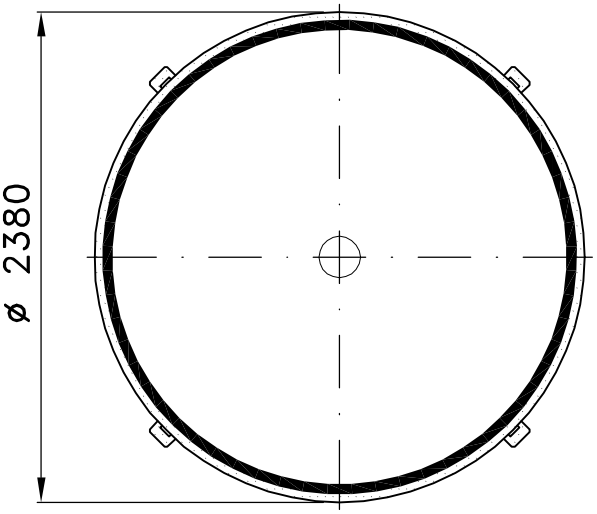

Tel. 035/844060 ASTRO Fax 035/844646