z:\ufftec\dis std\tco\a87_p

dis. 5297 AS

TCO 87/P – LT. 8.900

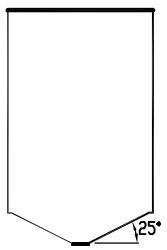

OTRE PE

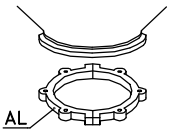

CS 2

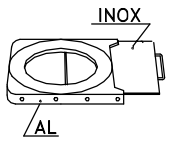

GH 2

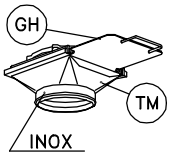

TM 2

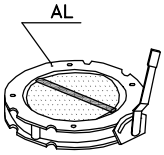

V2FS

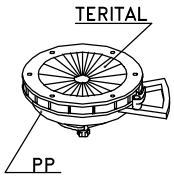

DF 2

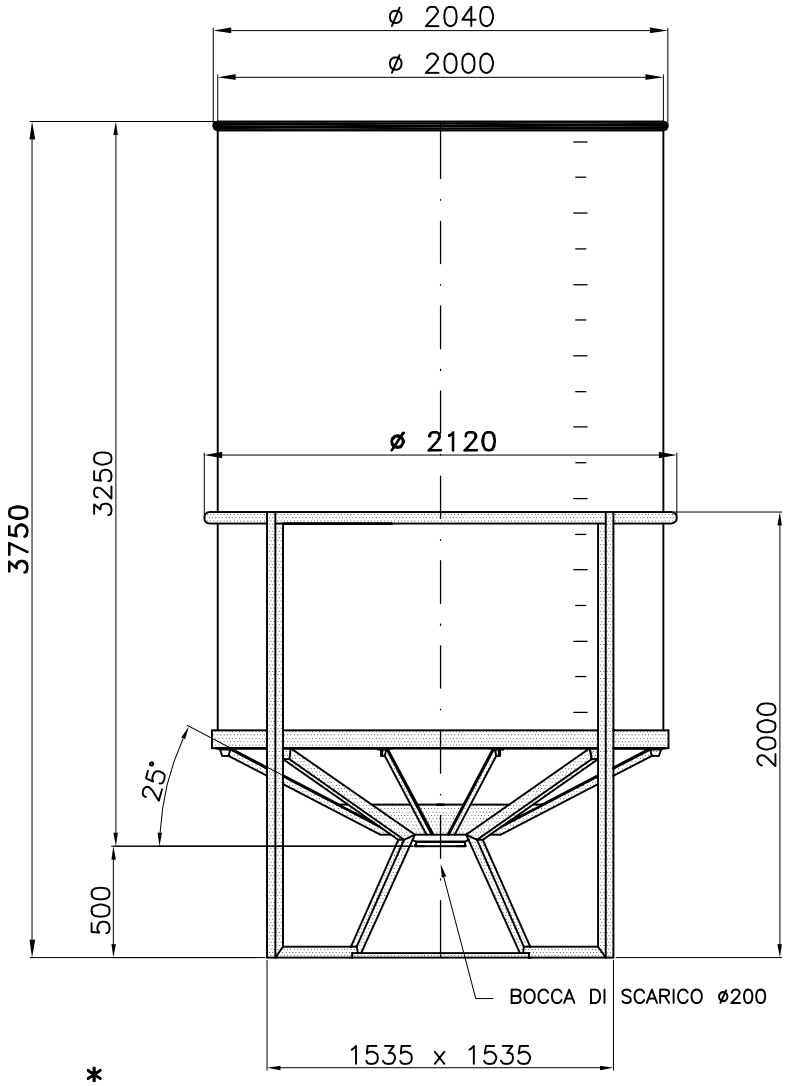

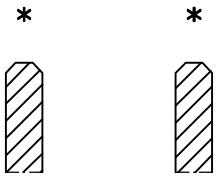

Inforcamento
a vuoto

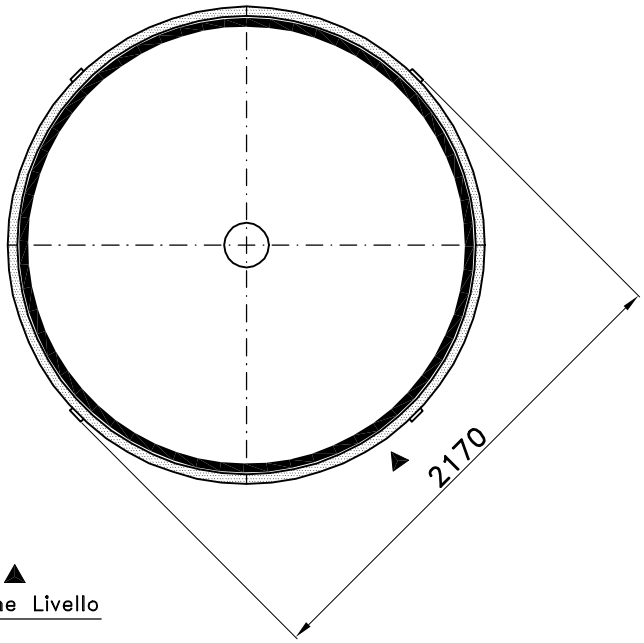

▲ Tacche Livello

Tel. 035/844060 ASTRO Fax 035/844646