z:\ufftec\dis std\tco\a50_2

dis. 5286 AS

TCO 50/2 – LT. 5100

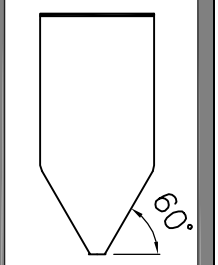

OTRE PE

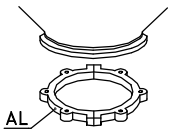

CS 2

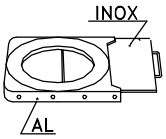

GH 2

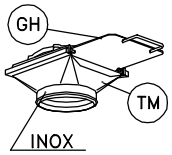

TM 2

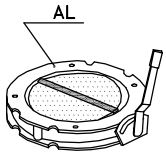

V2FS

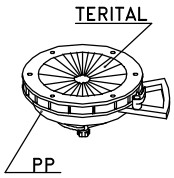

DF 2

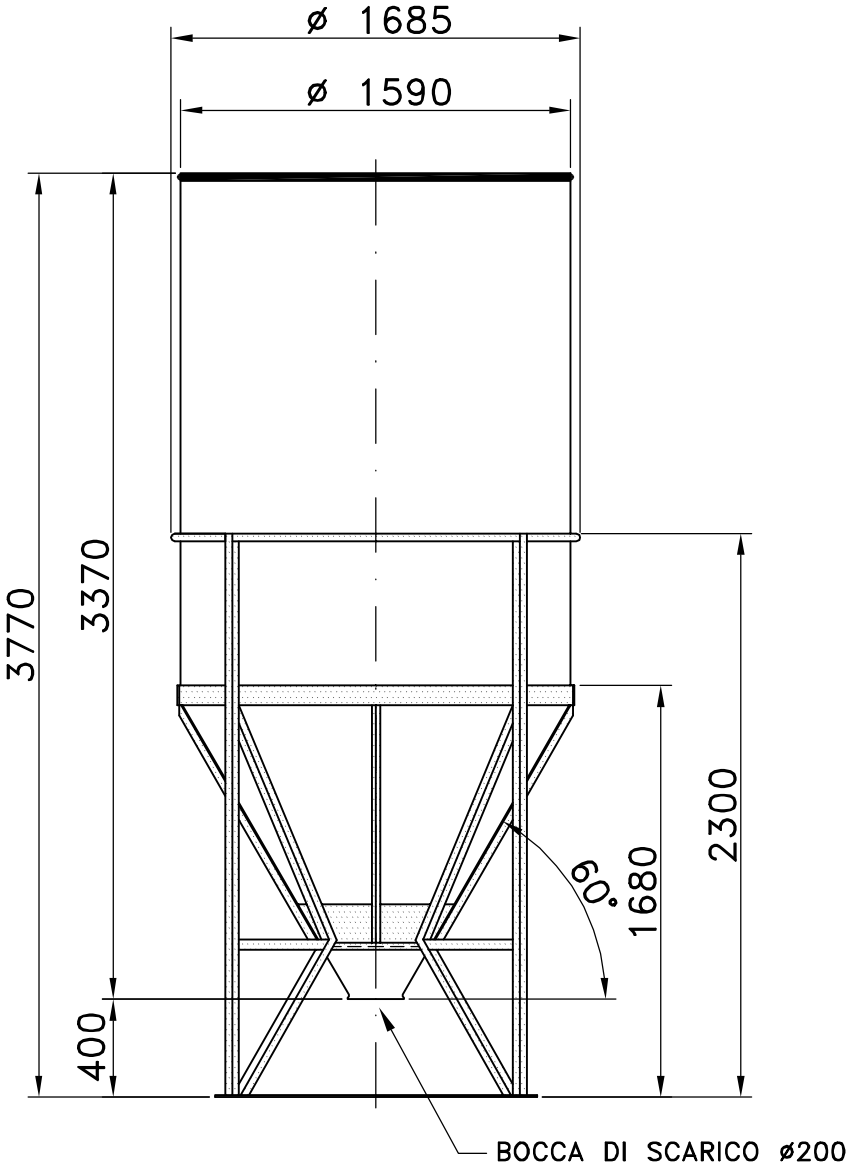

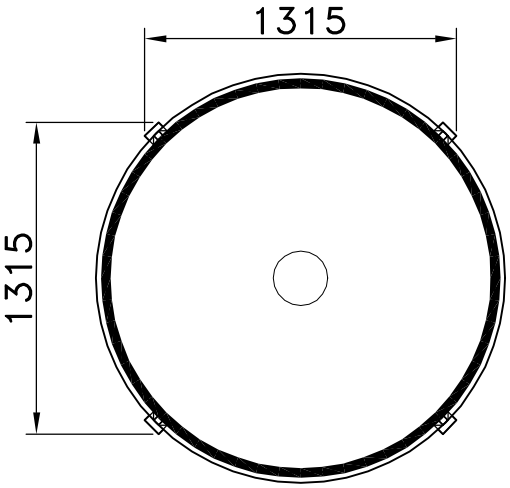

Tel. 035/844060 ASTRO Fax 035/844646