z:\ufftec\dis std\tco\a41_P

dis. 5283 AS

TCO 41/P – LT. 4.100

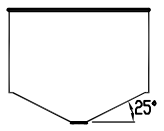

OTRE PE

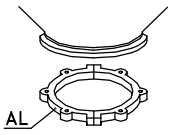

CS 2

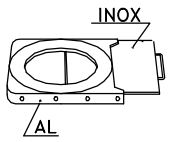

GH 2

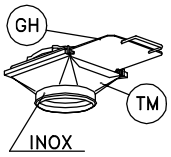

TM 2

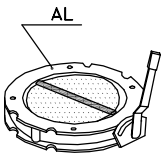

V2FS

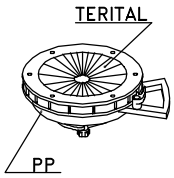

DF 2

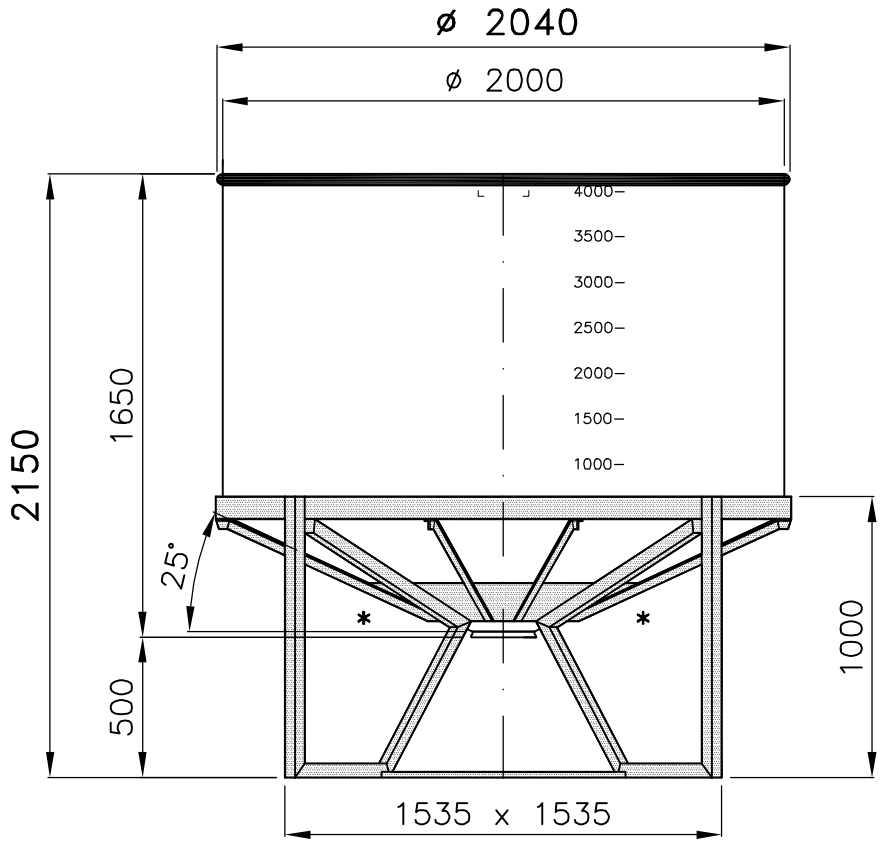

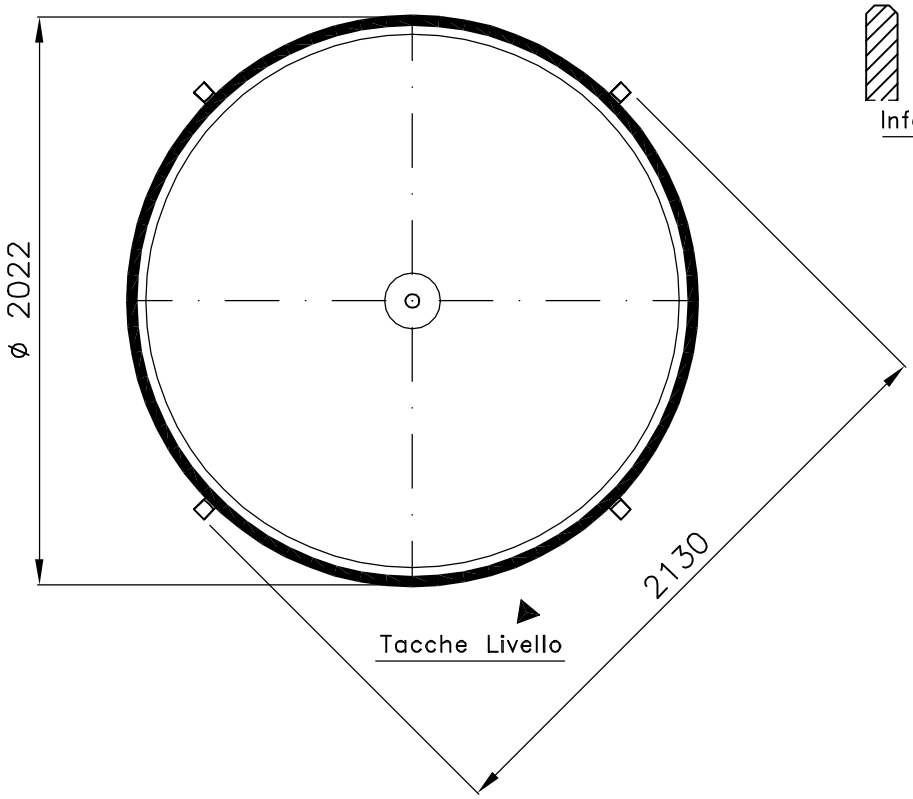

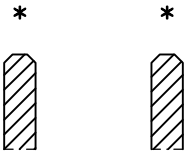

Inforcamento a vuoto

Tel. 035/844060 ASTRO Fax 035/844646