tca\a21_3

TCA 21/3 – LT. 1900

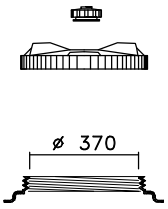

CPF 410
(optional)

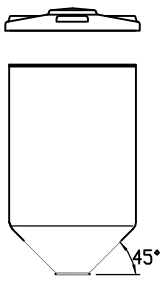

OTRE

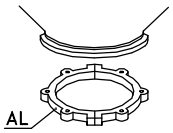

CS 3

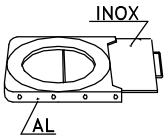

GH 3

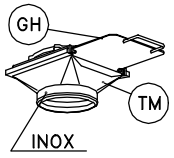

TM 3

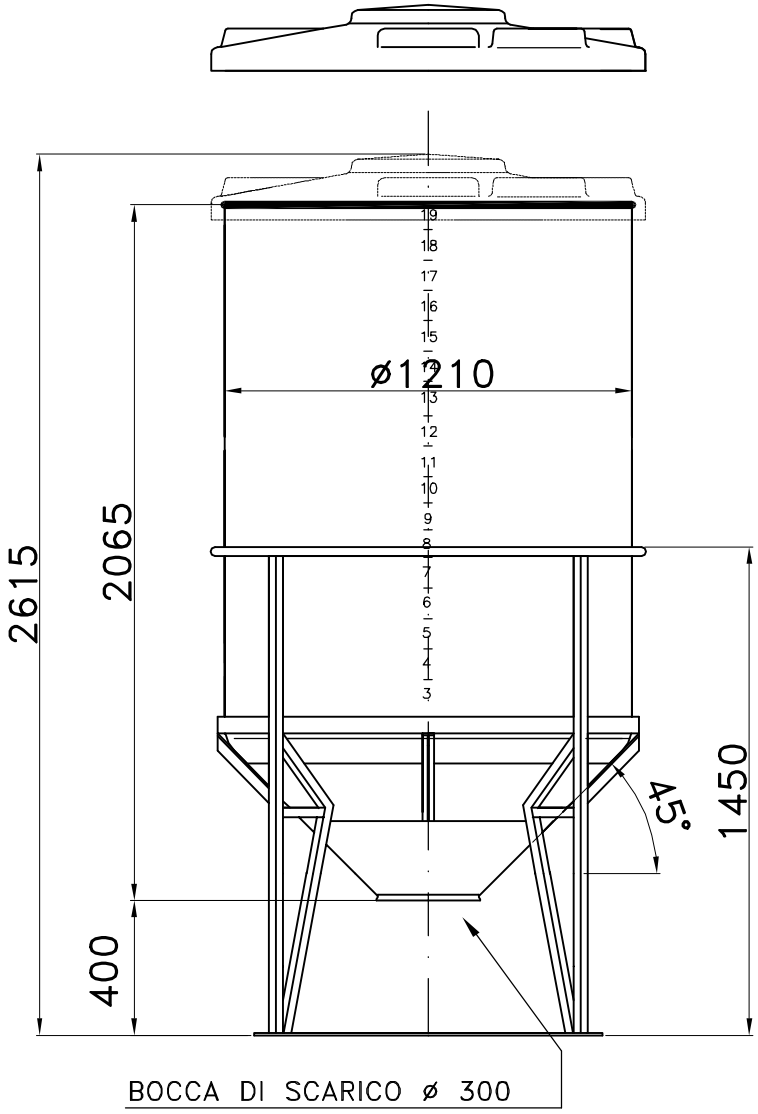

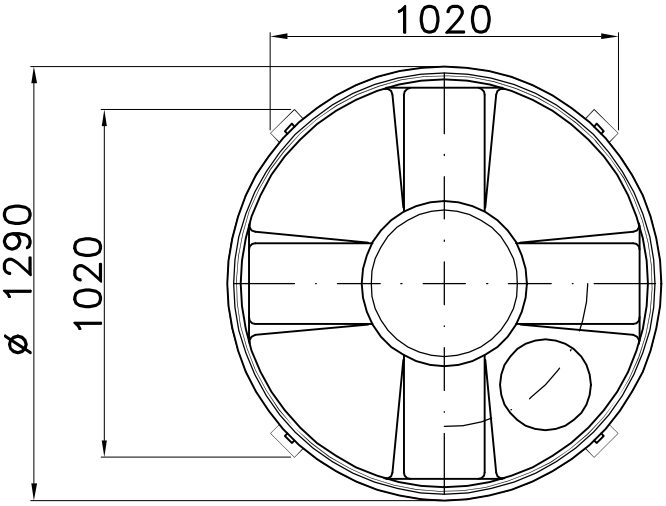

5252 AS

Tel. 035/844060 ASTRO Fax 035/844646