08.11.2005 – S.L. – tca\14_3st

dis. 4838 AS

TCA 14/3 – LT. 1400

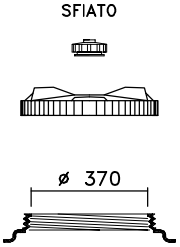

CPF ø 410
(optional)

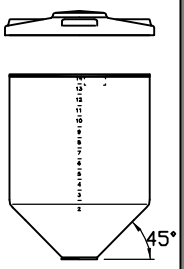

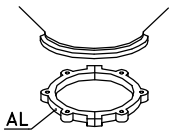

CS 3

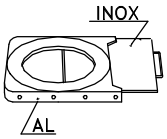

GH 3

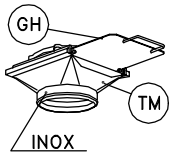

TM 3

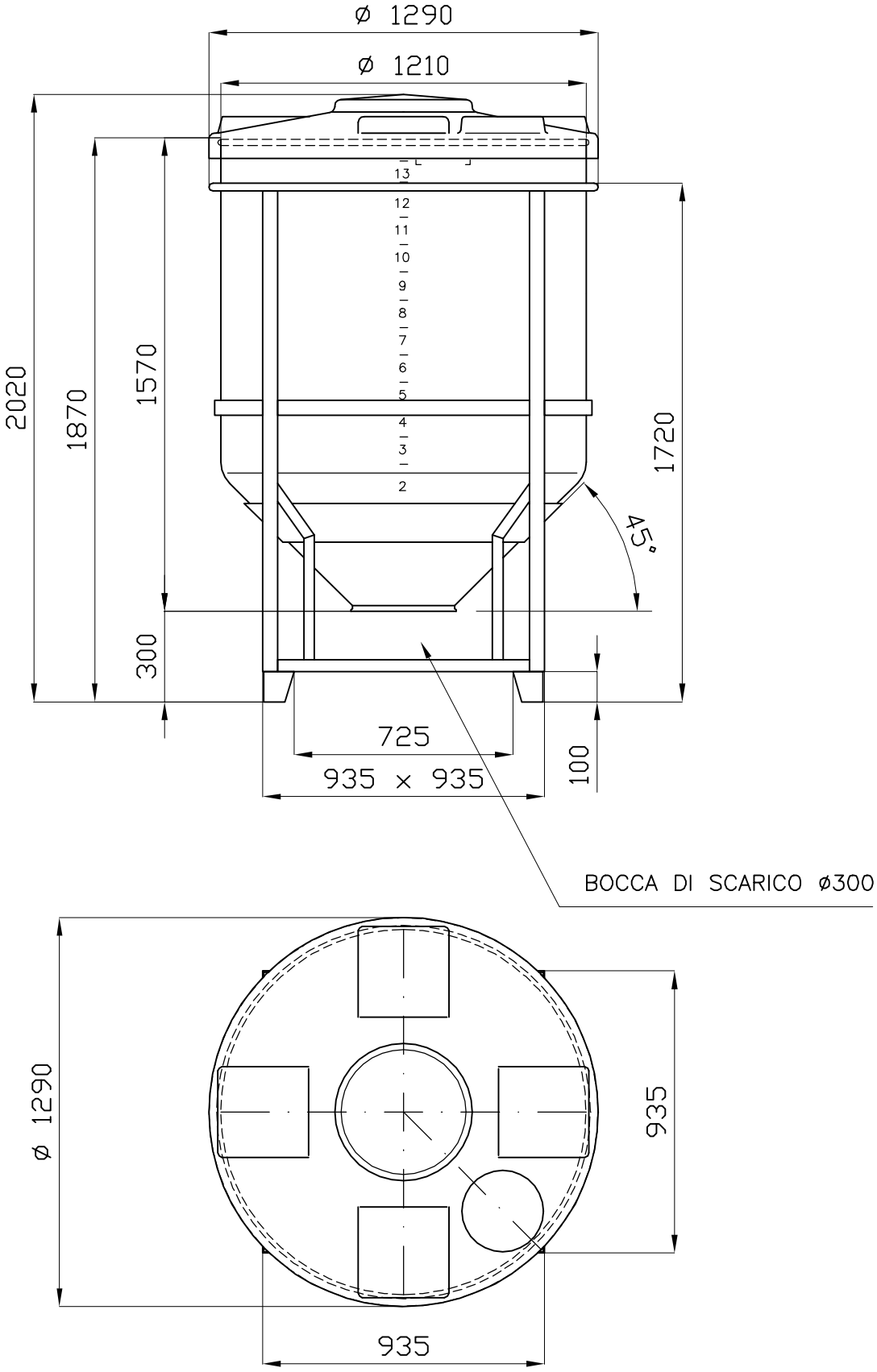

Tel. 035/844060 ASTRO Fax 035/844646