ASTRO CONTENITORI INDUSTRIALI

ART. 0846	MOD. TCO 32/2	LITRI 3.200

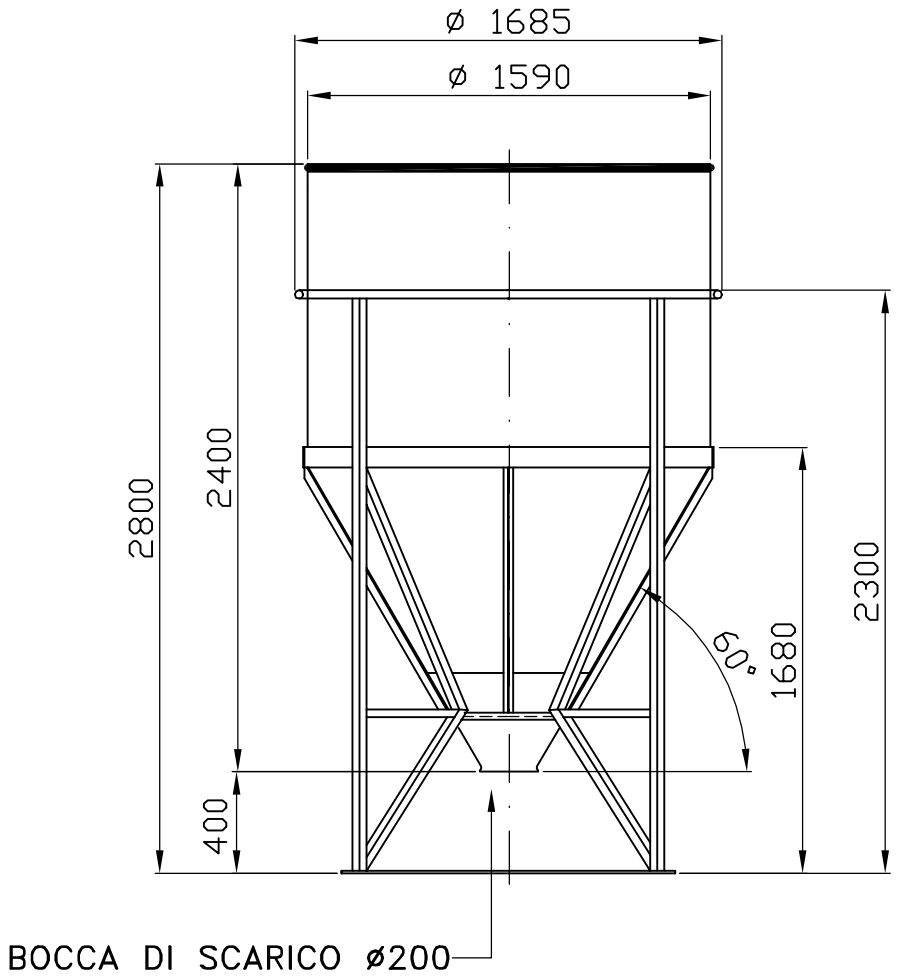

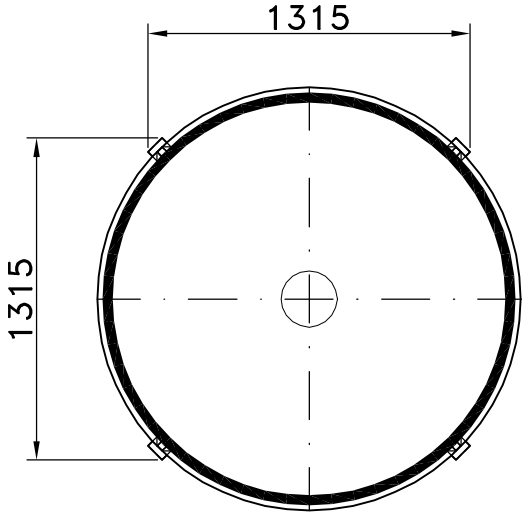

DISEGNO N. 4801 AS	DATA 13/10/05	LOCATELLI	dis.std.\tco\a32_2st

Tel. 035/844060 Fax 035/844646