dis. 4291/01 AS

TB 11/4 – LT. 1.000

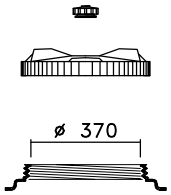

CPF 410
(optional)

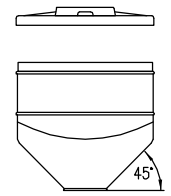

OTRE

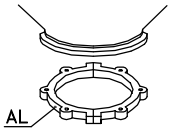

CS 4

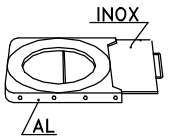

GH 4

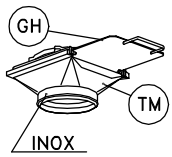

TM 4

(*)

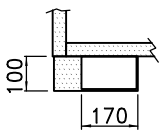

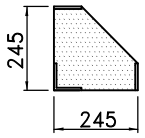

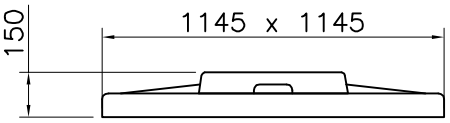

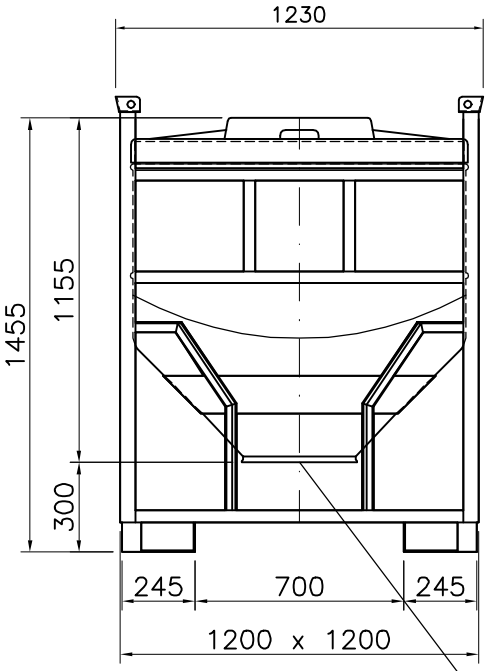

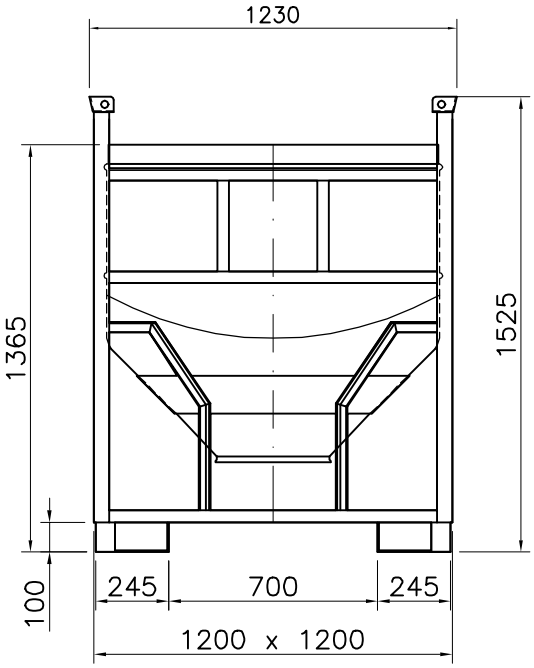

BOCCA DI SCARICO ø450

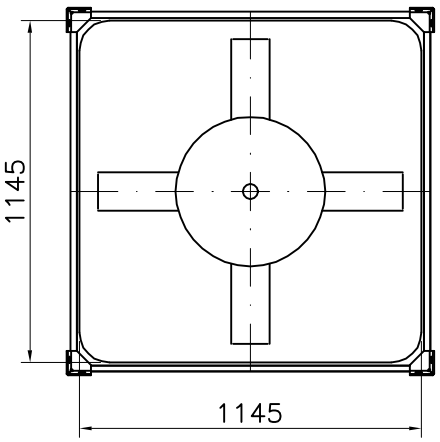

S.L. – 23/09/2003 – \tb\a-tb11_4

01: STEFANO_S – 19/03/2010 – PIASTRA APPOGGIO FACILE

Tel. 035/844060 ASTRO Fax 035/844646