tca\5_2-st

TCA 5/2 – LT. 500

SFIATO

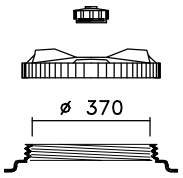

CPF ø 410
(optional)

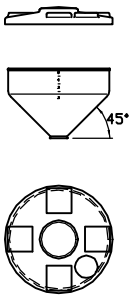

OTRE

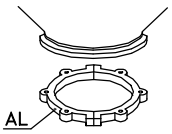

CS 2

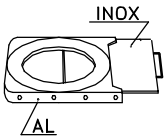

GH 2

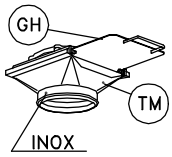

TM 2

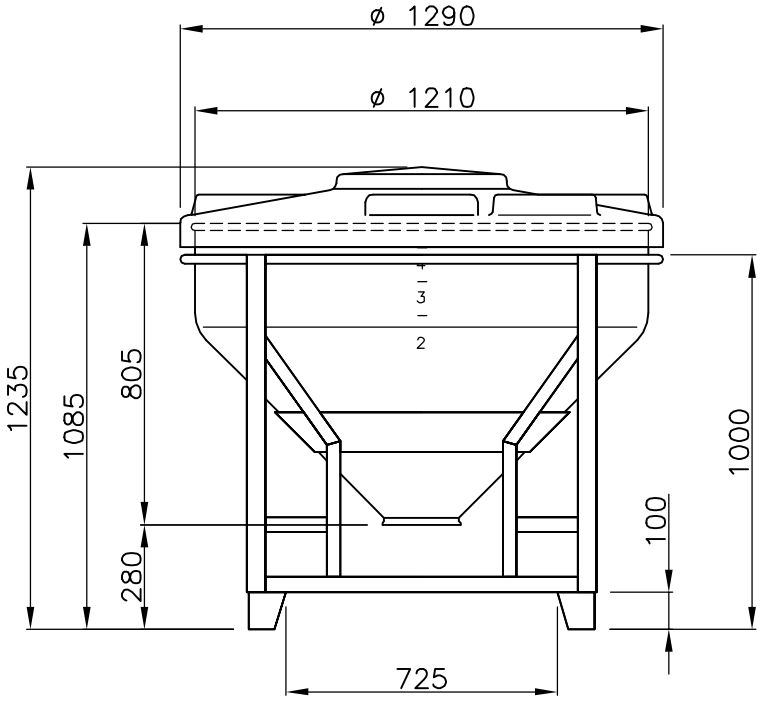

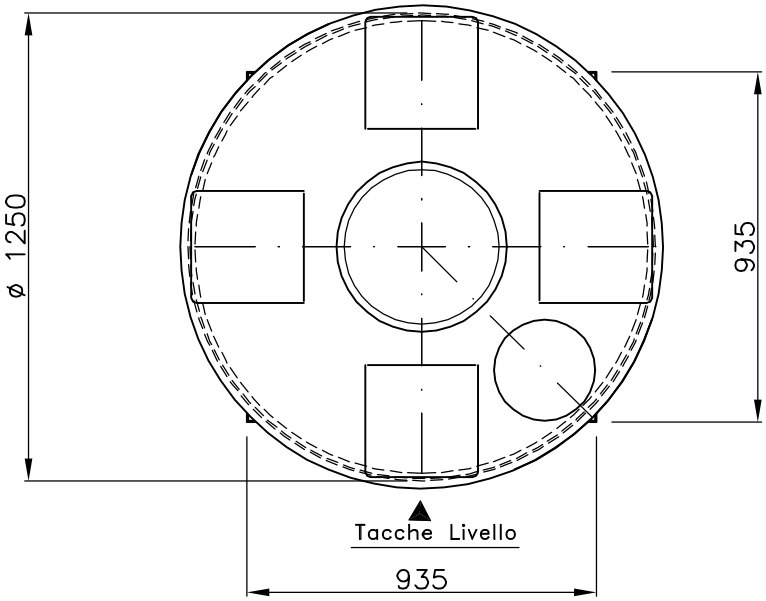

01)M.M.–02/05/07–agg. sfiato

dis. 4288/1 AS

Tel. 035/844060 ASTRO Fax 035/844646