S.L. - 07/03/02 - \tco\polveri\9_3st

dis. 4130 AS

TCO 9/3 - LT. 900

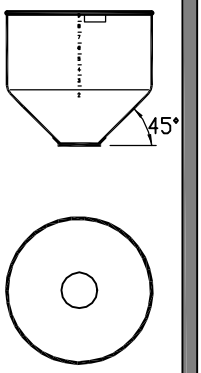

OTRE

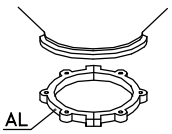

CS 3

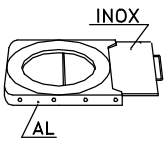

GH 3

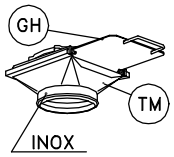

TM 3

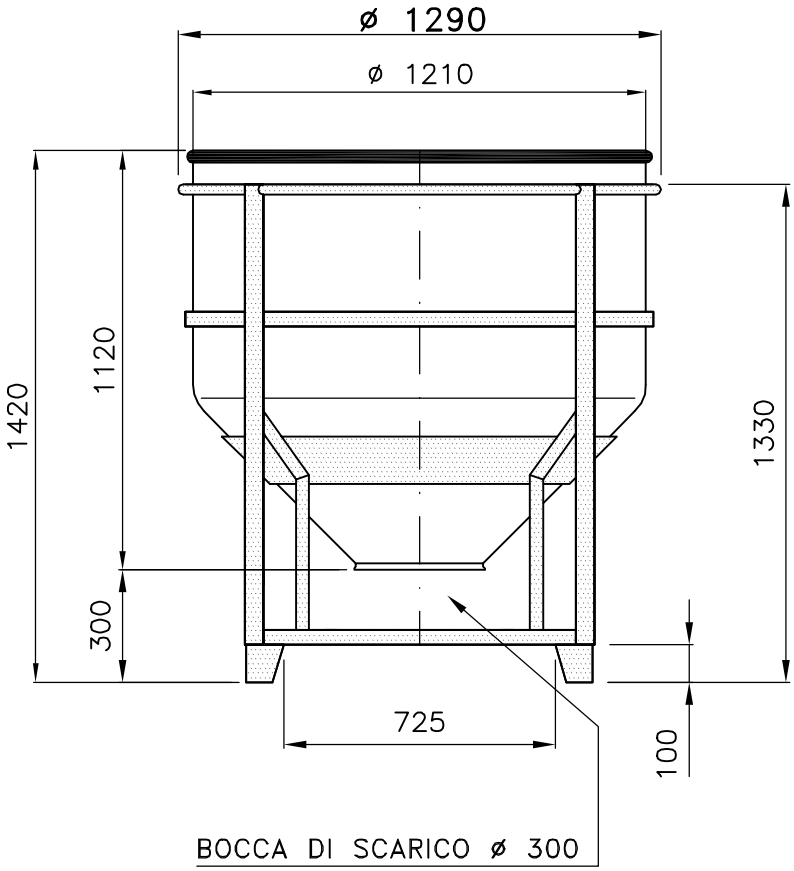

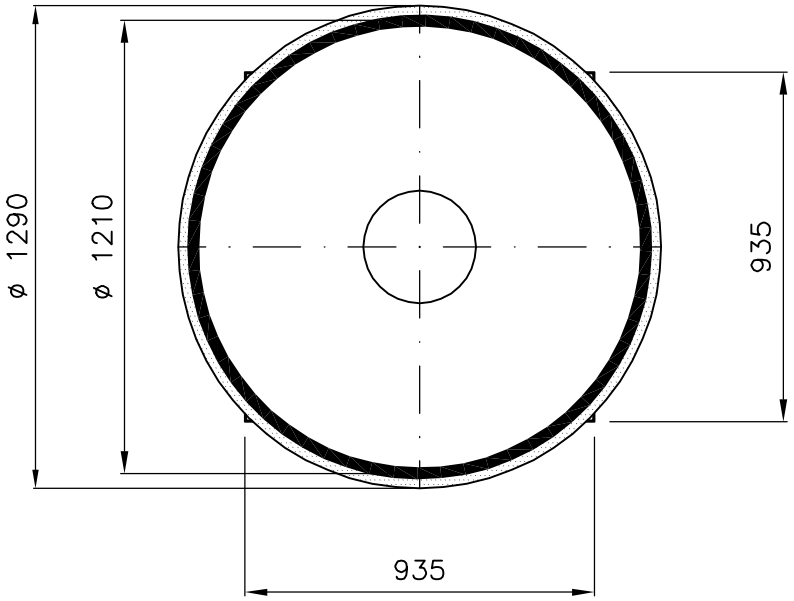

Tel. 035/844060 ASTRO Fax 035/844646