S.L. - 30/03/03 - \tco\liquidi\5_4st

dis. 4127 AS

# TCO 5/4 ST - LT. 500

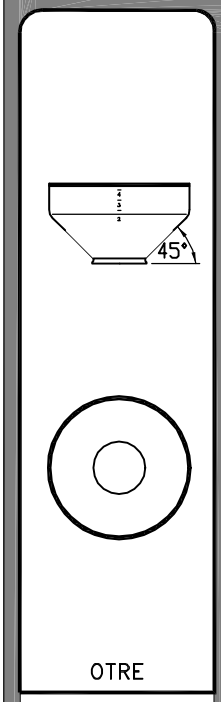


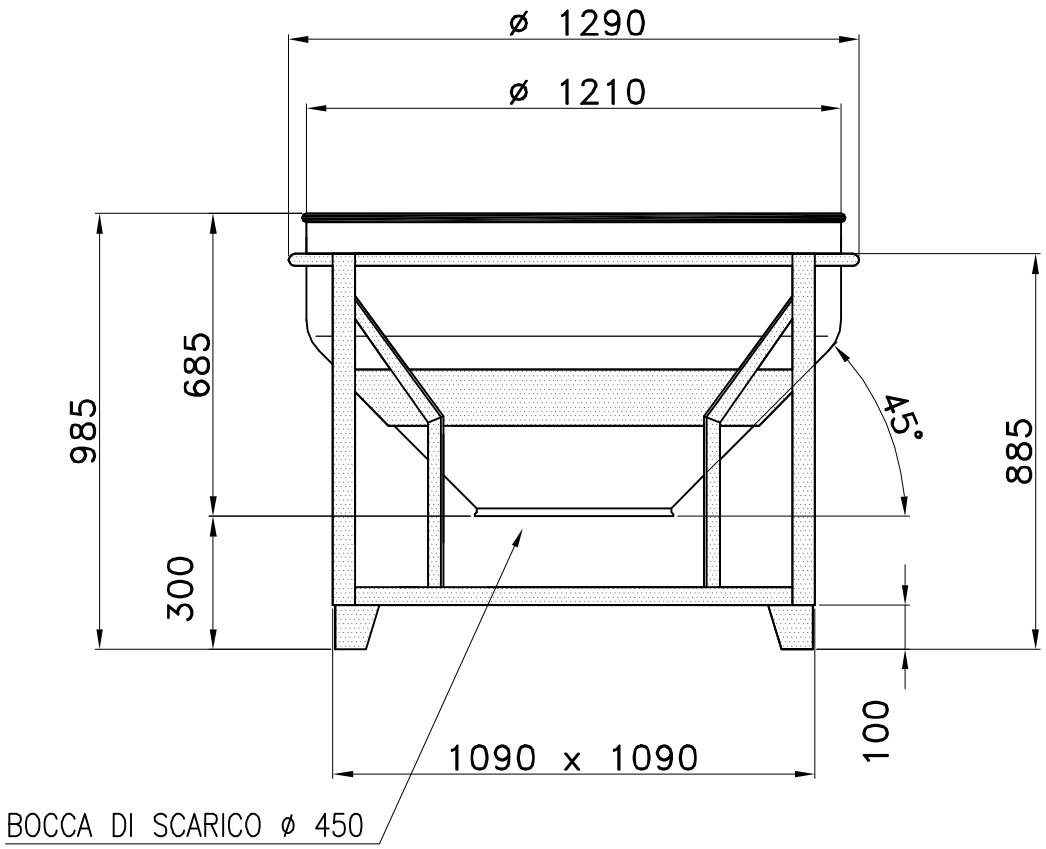


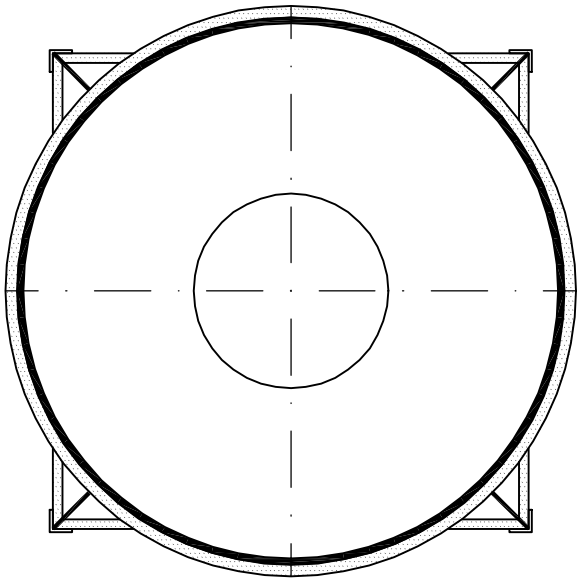

Tel. 035/844060 ASTRO Fax 035/844646