dis. 4100/2 AS

TC 11/4 – LT. 1.080

tc\a-11-4

CPF 410

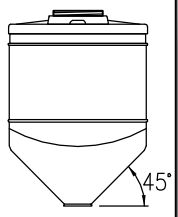

OTRE

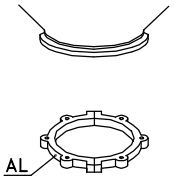

CS 4

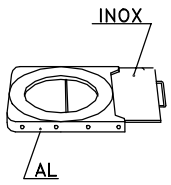

GH 4

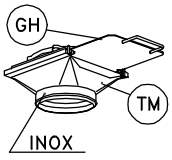

TM 4

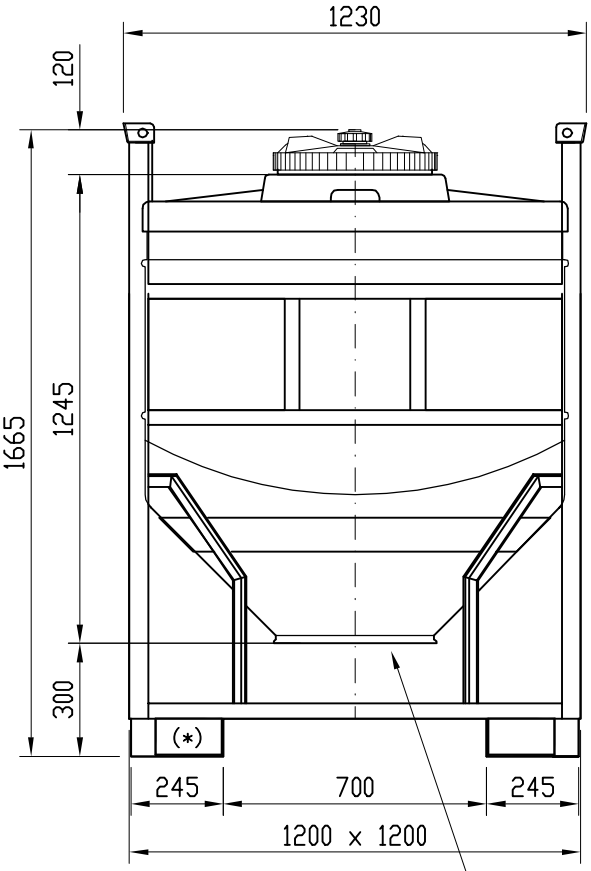

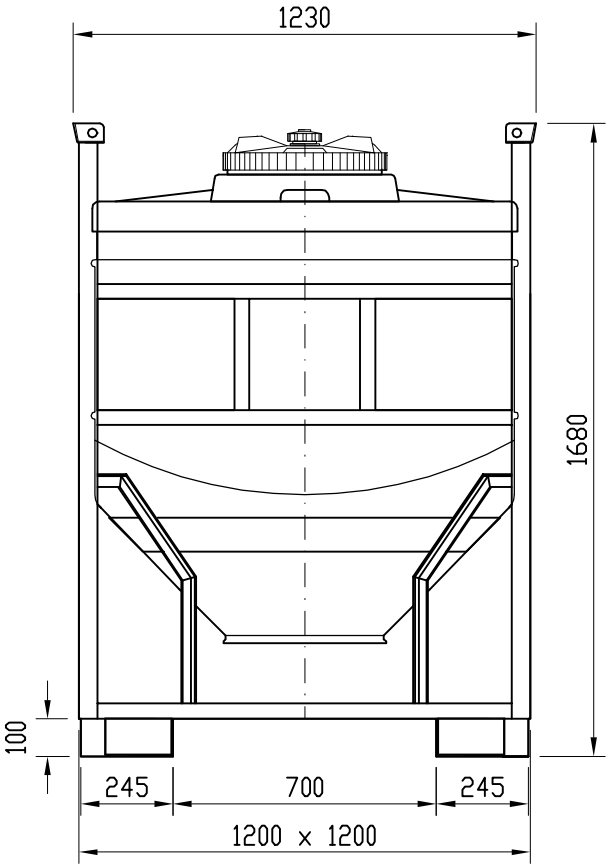

BOCCA di SCARICO ø450

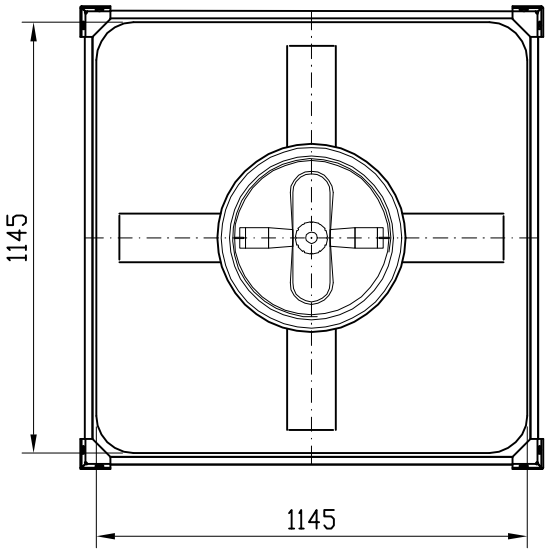

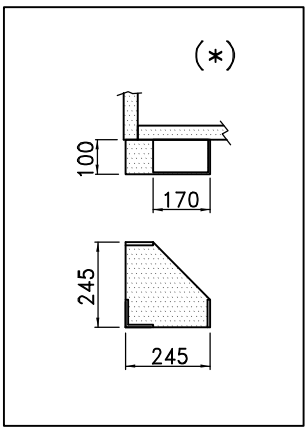

STEFANO_S 19/03/2010 \2: PIASTRA APPOGGIO FACILE

Tel. 035/844060 ASTRO Fax 035/844646