dis. 4099/02 AS

TC 14/4 – LT. 1.400

tc\a-14-4

CPF 410 + SF1

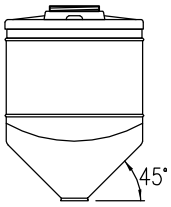

OTRE

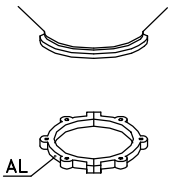

CS 4

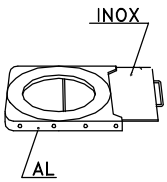

GH 4

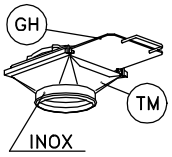

TM 4

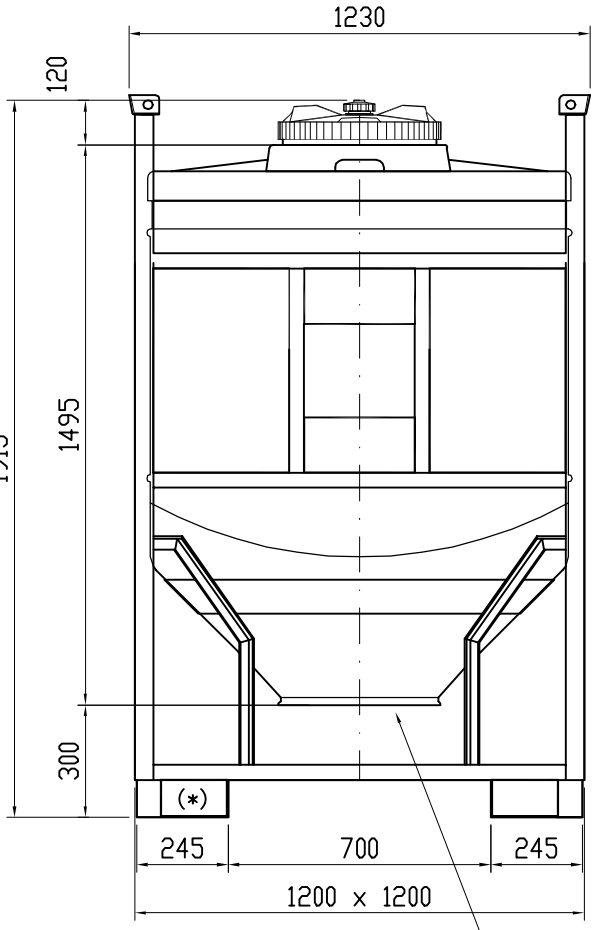

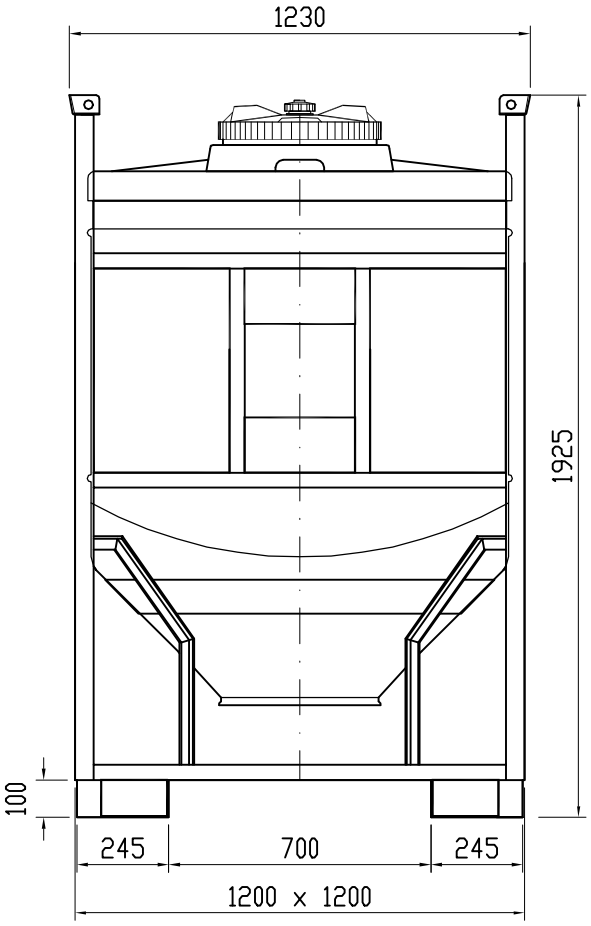

BOCCA di SCARICO ø450

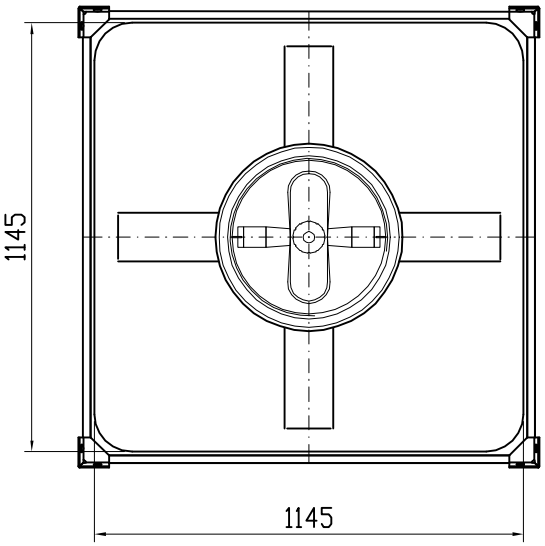

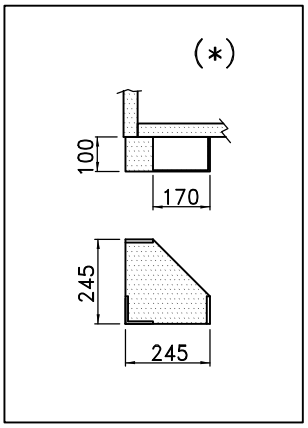

02: STEFANO_S – 19/03/2010 – PIASTRA APPOGGIO FACILE

Tel. 035/844060 ASTRO Fax 035/844646