DIS. 3952 AS

TCO 41/L – LT. 4100

S.L. – 09.05.02 – \tco\a41l-st 2002

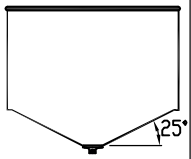

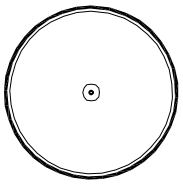

OTRE PE

LT. ~3620

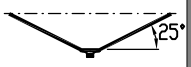

LT. ~480

SCARICO

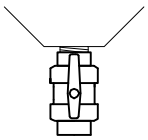

VERTICALE

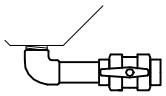

ORIZZONTALE

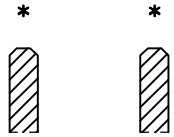

Inforcamento a vuoto

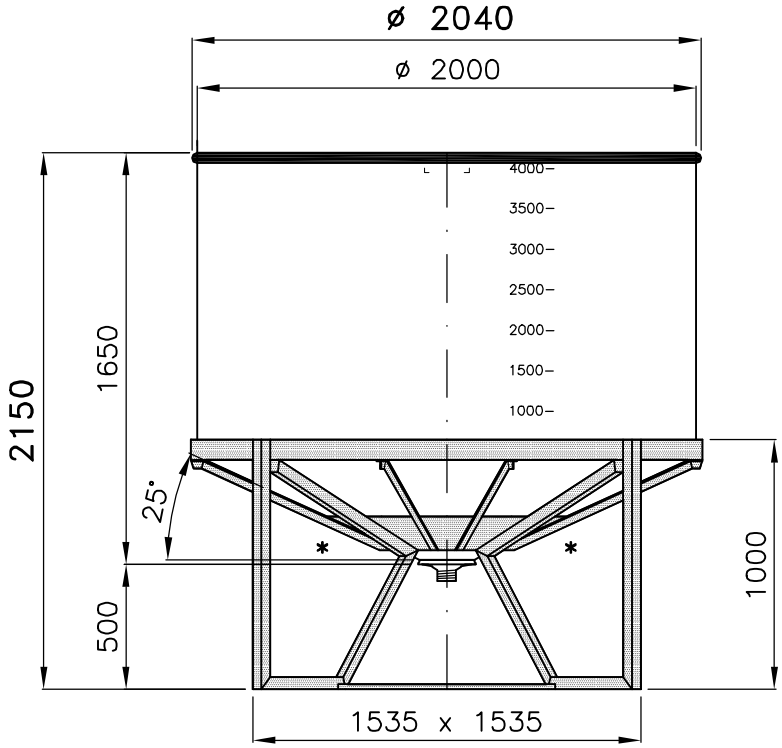

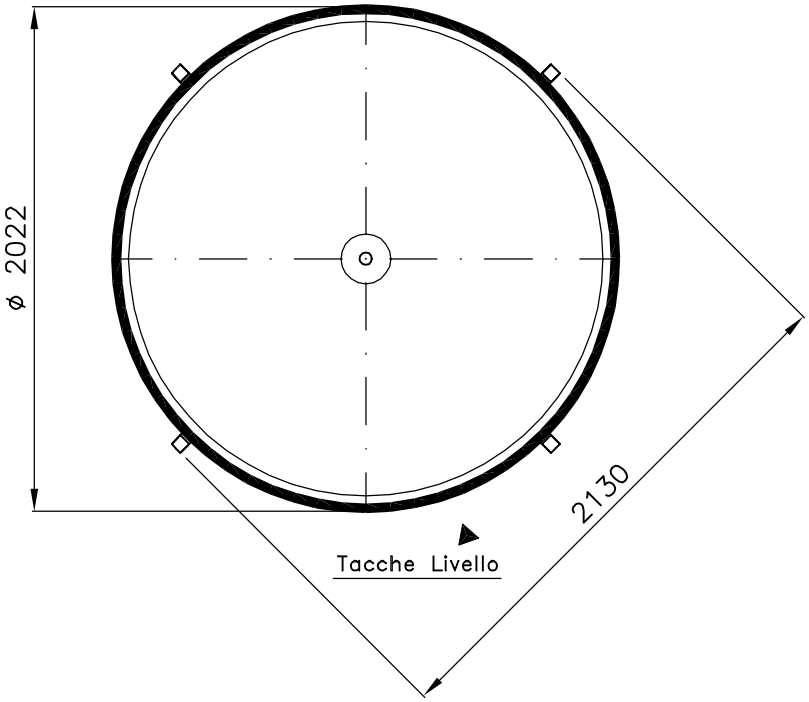

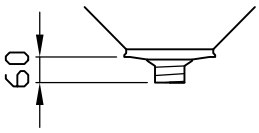

Su richiesta : uscita filettata maschio Gas
1" – 1¼" – 1½" – 2" – 2½" – 3" – 4"

Tel. 035/844060 ASTRO Fax 035/844646