dis. 3914/01 AS

# TCA 45/2 – LT. 4500

COPERCHIO PARAPOLVERE

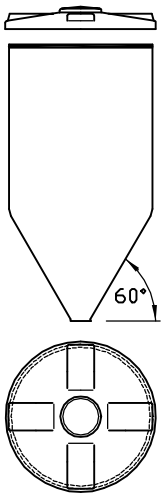


OTRE PE

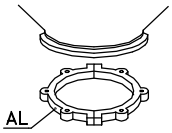


CS 2

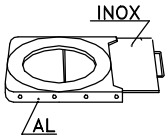


GH 2

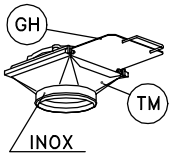


TM 2

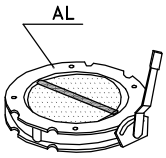


V2FS

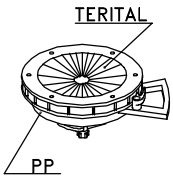


DF 2

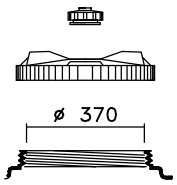


CPF 410

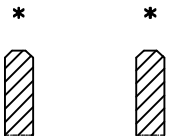


Inforcamento a vuoto

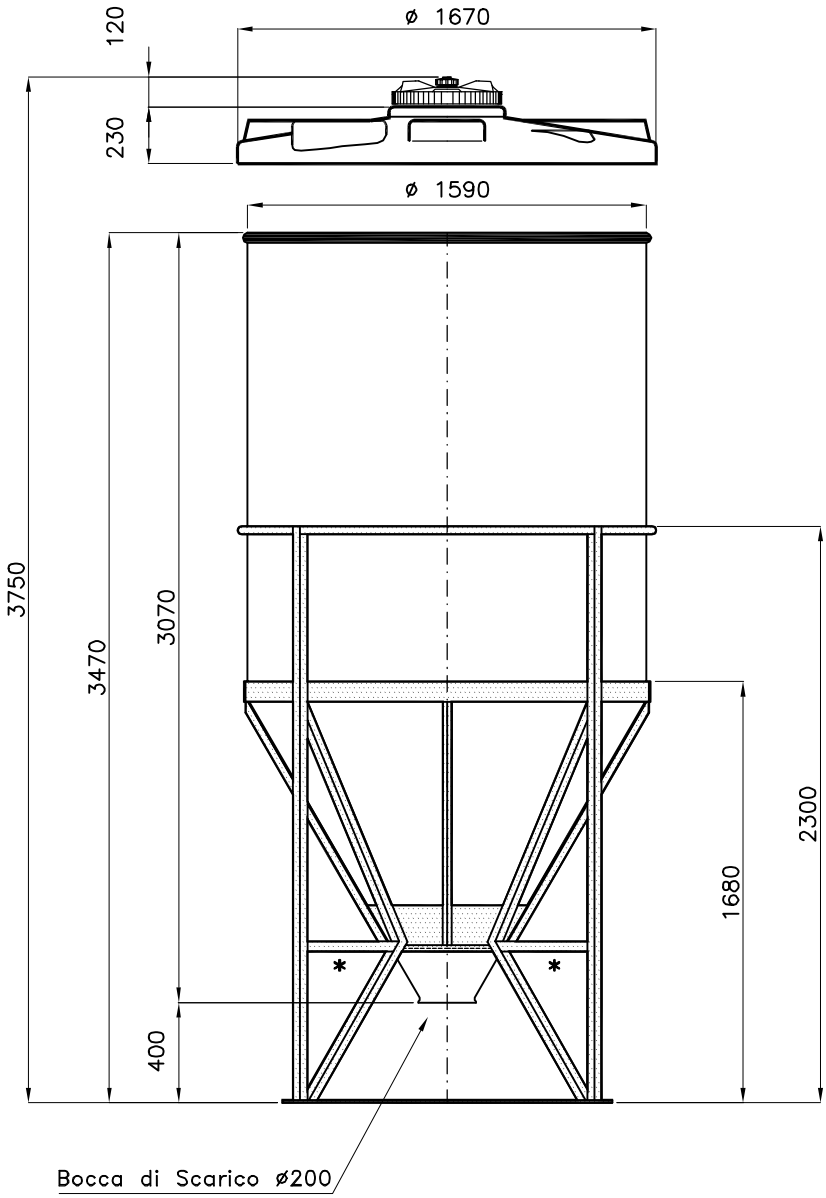


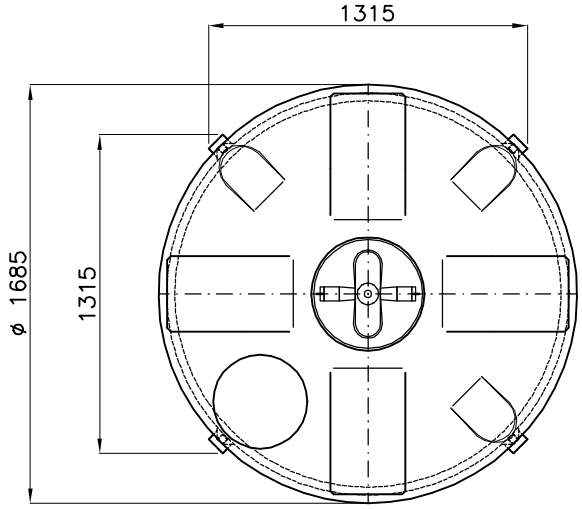


11/03/02 – G.M. tca\a45_2–cpf410st

01: SL – 20.07.09 – COPERCHIO TB; SCALA 1:1

Tel. 035/844060 ASTRO Fax 035/844646