G.M. 27/27/02 - tc\a-21-3

dis. 3900/03 AS

TC 21/3 - LT. 2.100

CPF 410

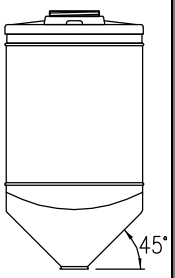

OTRE

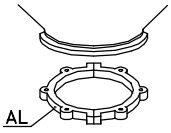

CS 3

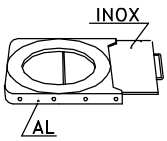

GH 3

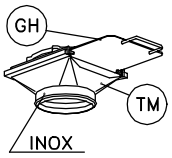

TM 3

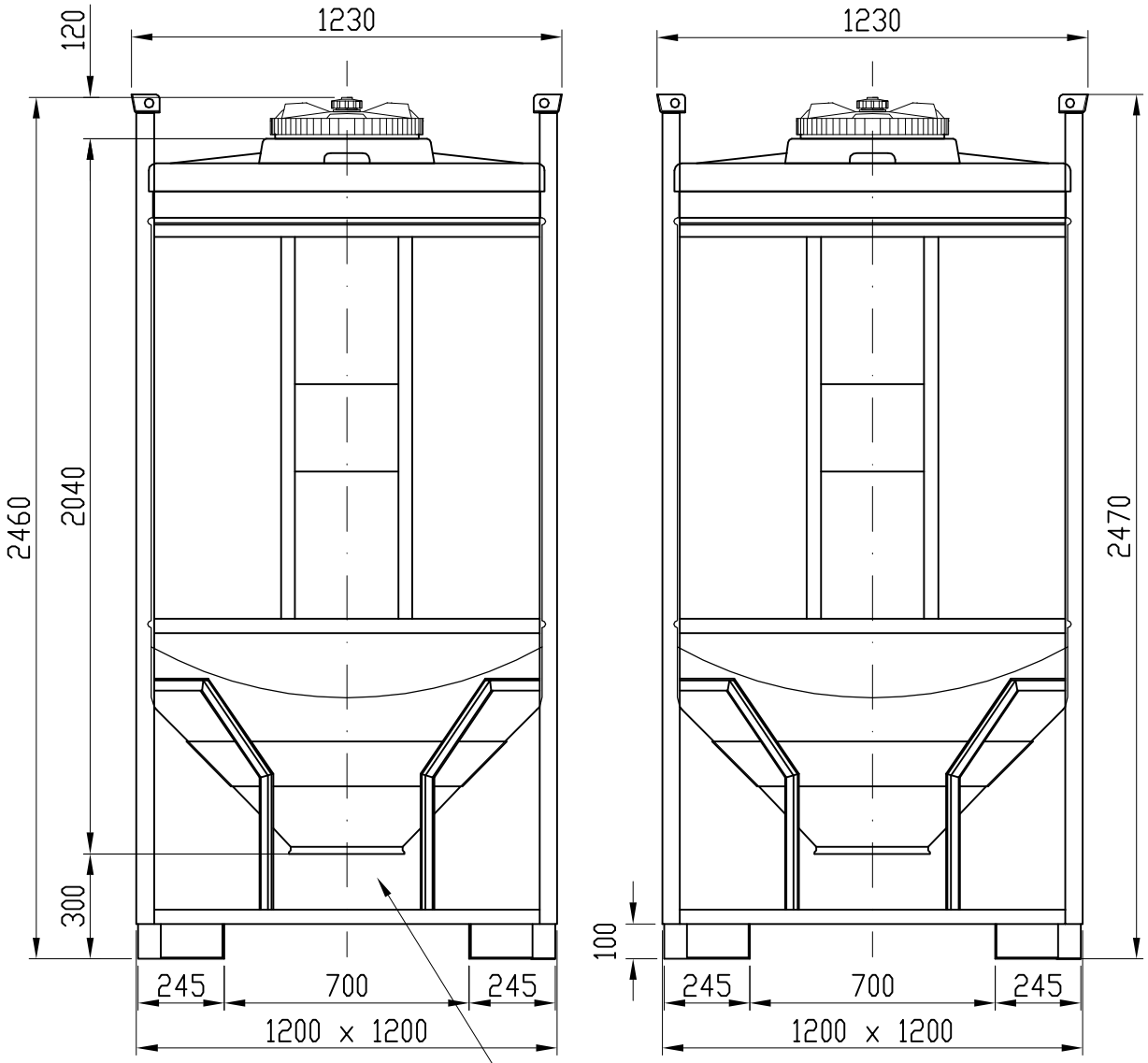

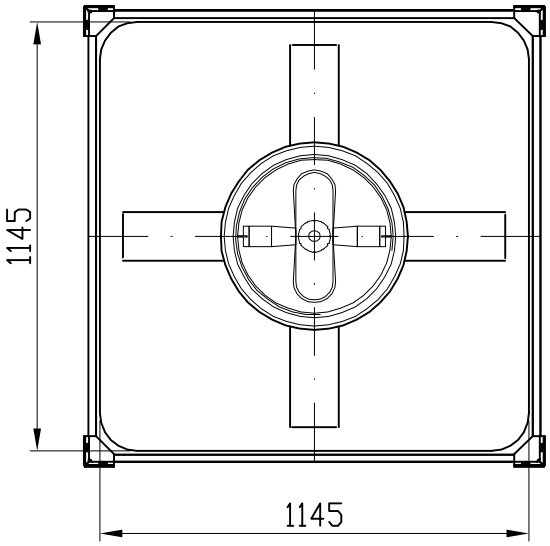

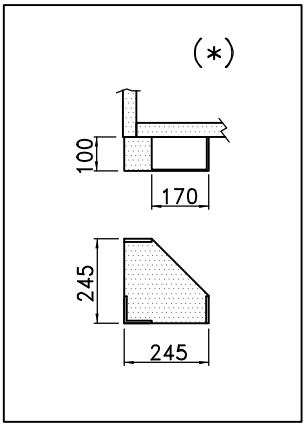

03: STEFANO_S. - 03.05.10 - PIASTRE APPOGGIO FACILE

Tel. 035/844060 ASTRO Fax 035/844646