dis. 3853/1 AS

TCA 32/2 – LT. 3200

COPERCHIO PARAPOLVERE

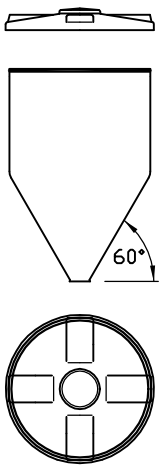

OTRE PE

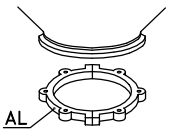

CS 2

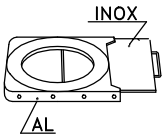

GH 2

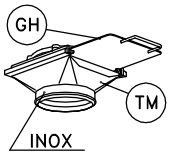

TM 2

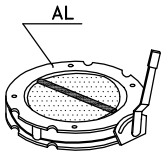

V2FS

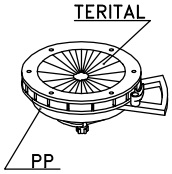

DF 2

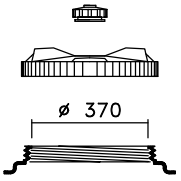

CPF 410

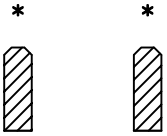

Inforcamento a vuoto

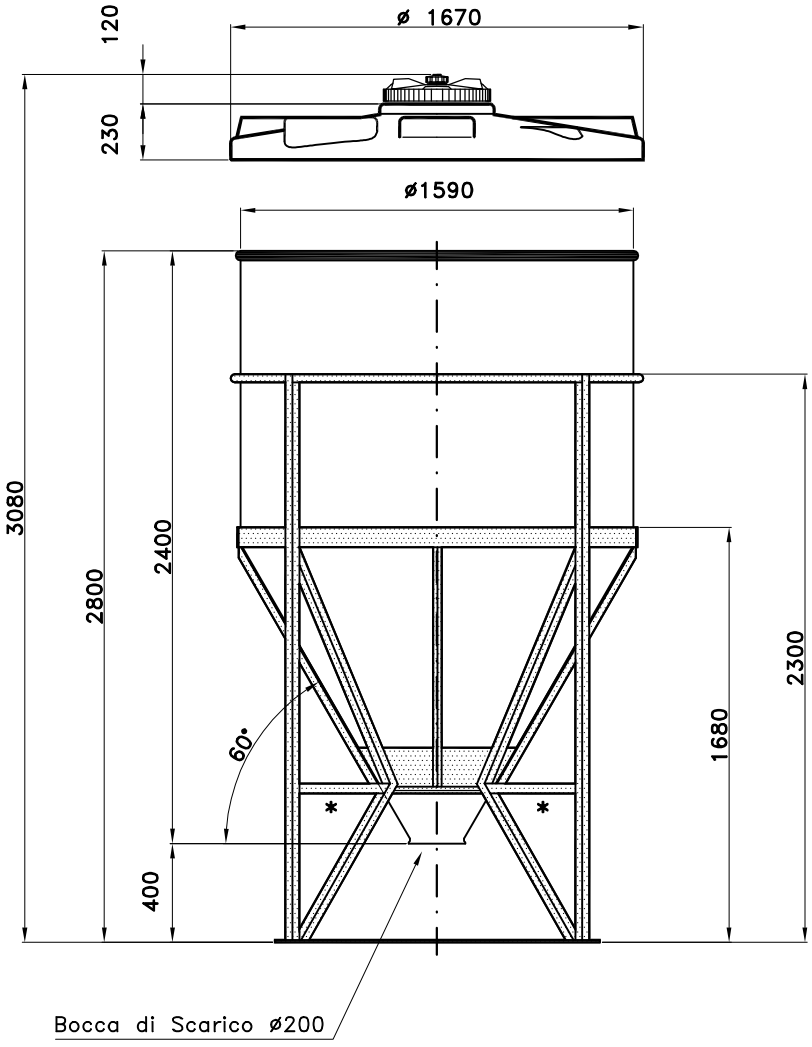

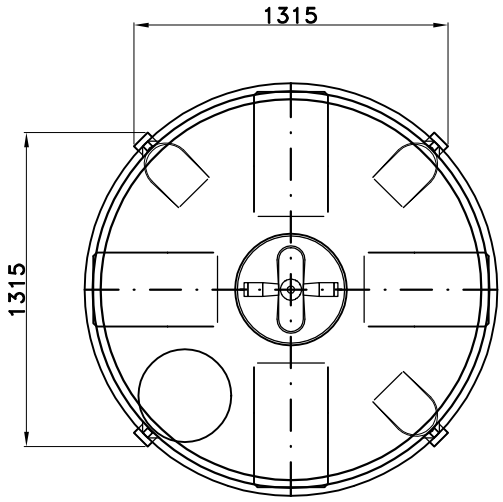

25/01/02 – G.M. tca\a32_2–cpf410st

01) M.M.–16.07.07 – Modifica testata

Tel. 035/844060 ASTRO Fax 035/844646