G.M. 26/11/2001 – TCO\14_4st

dis. 3800 AS

TCO 14/4 ST – LT. 1400

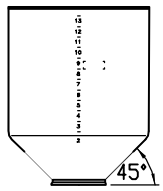

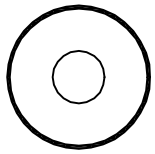

OTRE

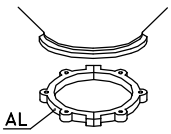

CS 4

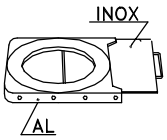

GH 4

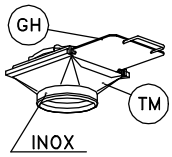

TM 4

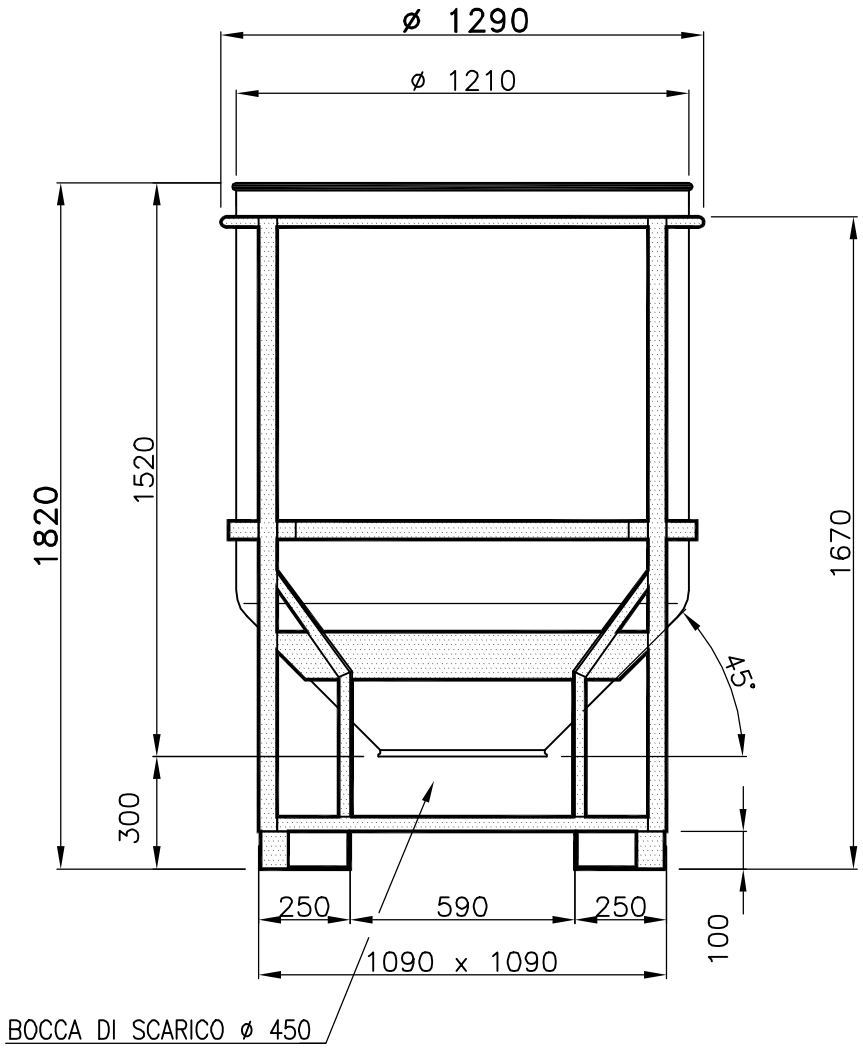

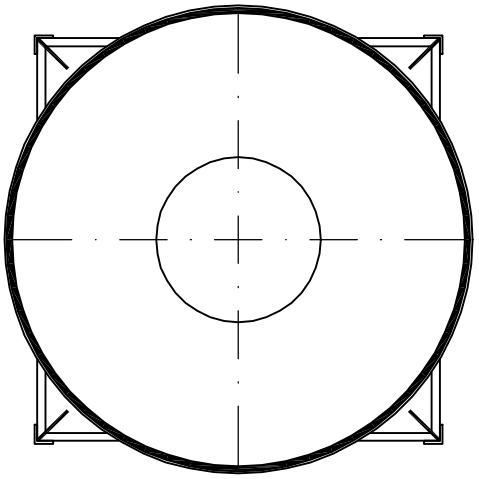

Tel. 035/844060 ASTRO Fax 035/844646