G.M. 23/11/2001 – TCO\12_4st

dis. 3799 AS

TCO 12/4 ST – LT. 1200

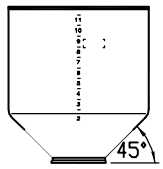

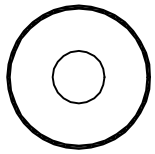

OTRE

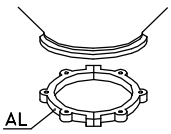

CS 4

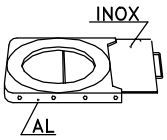

GH 4

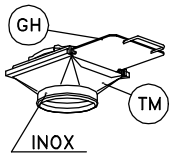

TM 4

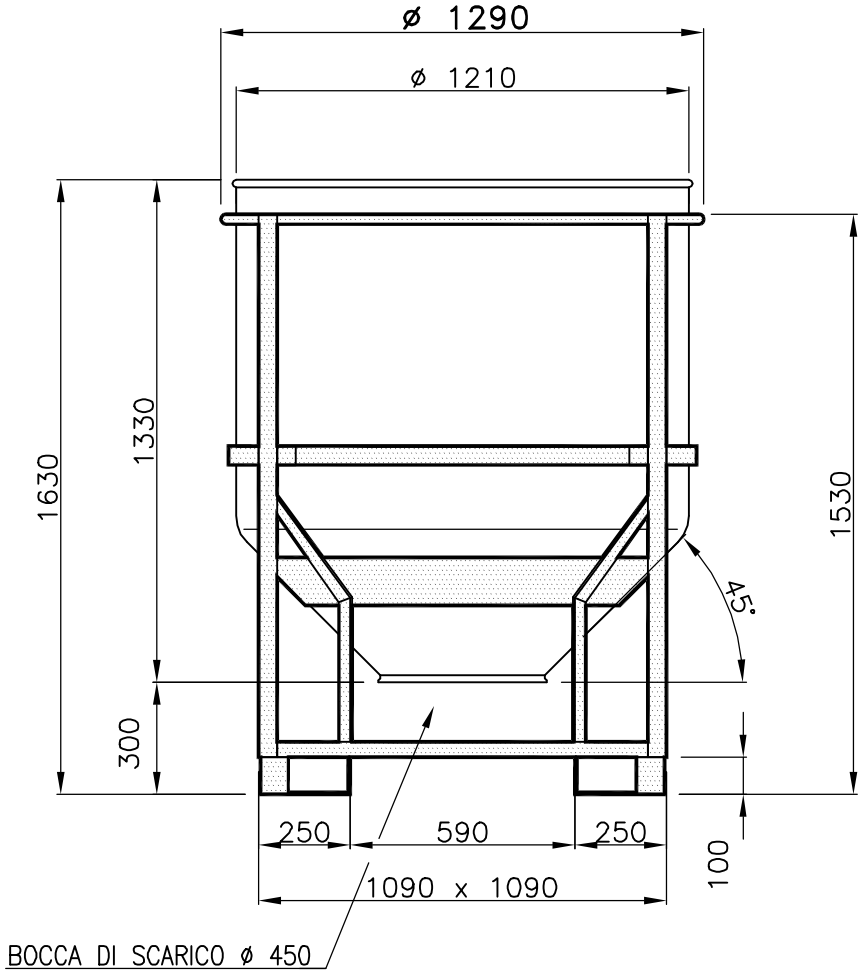

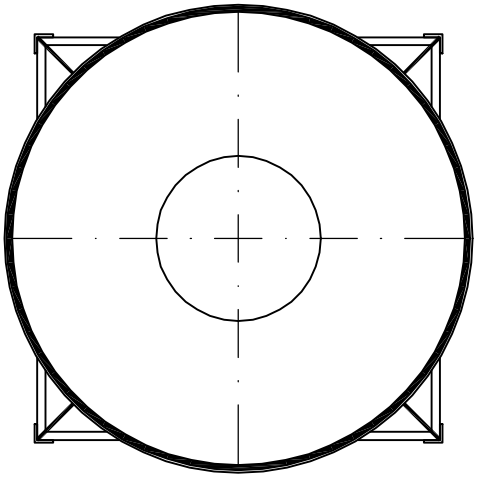

Tel. 035/844060 ASTRO Fax 035/844646