G.M. 26/10/01 – tc\a-21-2

dis. 3778/02 AS

TC 21/2 – LT. 2.100

CPF 410

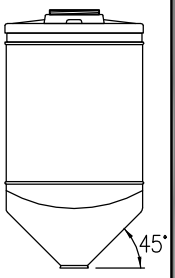

OTRE

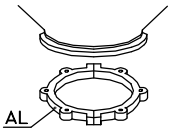

CS 2

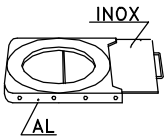

GH 2

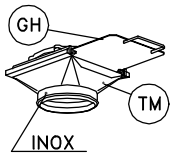

TM 2

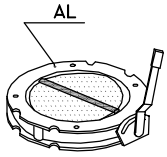

V2FS

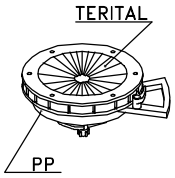

DF 2

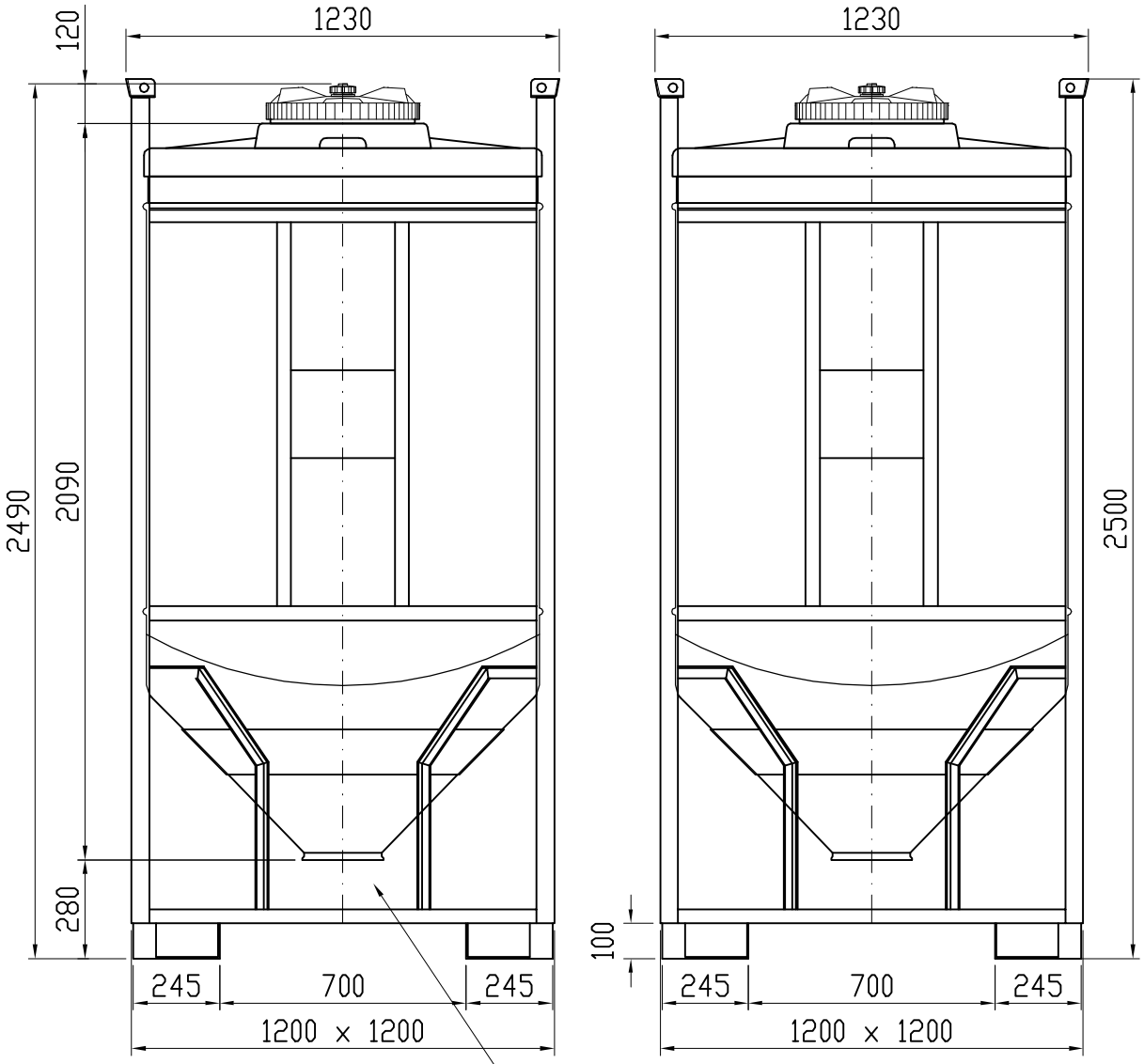

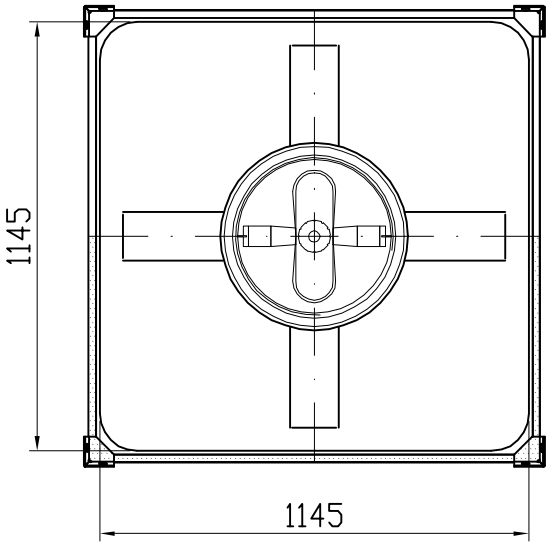

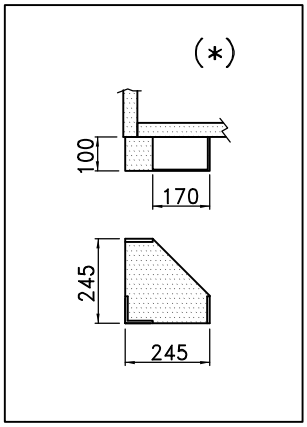

02: STEFANO_S – 26/03/2010 – PIASTRA APPOGGIO FACILE

Tel. 035/844060 ASTRO Fax 035/844646