dis. 3775/02 AS

TC 11/2 – LT. 1.080

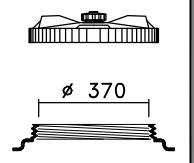

CPF 410

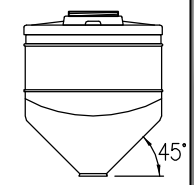

OTRE

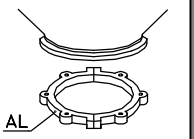

CS 2

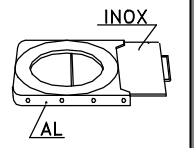

GH 2

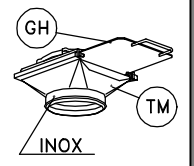

TM 2

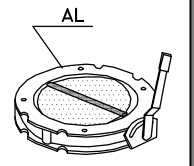

V2FS

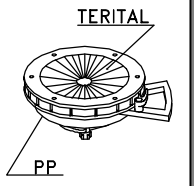

DF 2

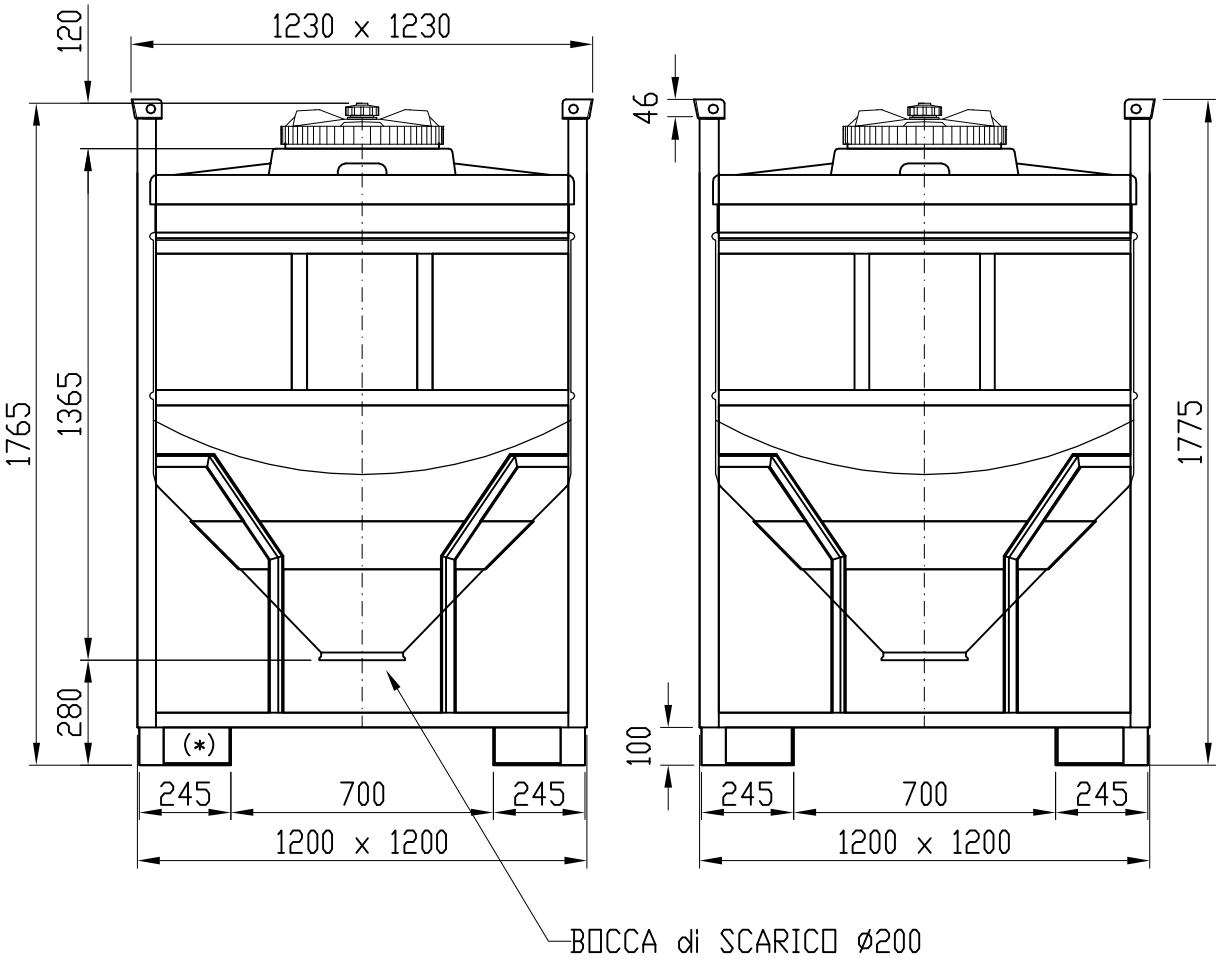

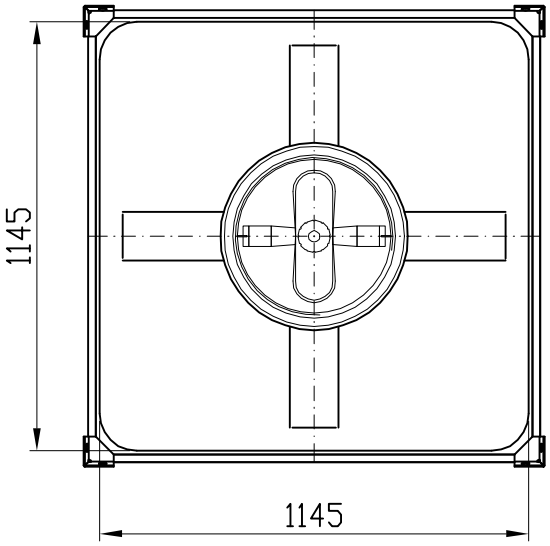

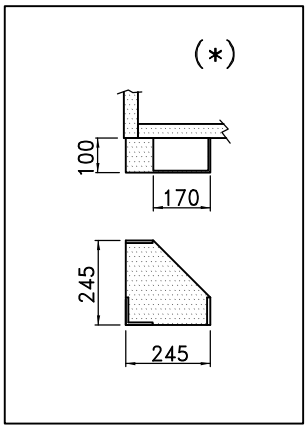

02: STEFANO_S – 19/03/2010 – PIASTRA APPOGGIO FACILE

G.M. 26/10/01 – tc\a-11-2

Tel. 035/844060 ASTRO Fax 035/844646