dis. 3558 AS

TCA 45/3 – LT. 4.500

SL – 28.07.09 – ..\tca\polveri\a45_3

COPERCHIO PARAPOLVERE

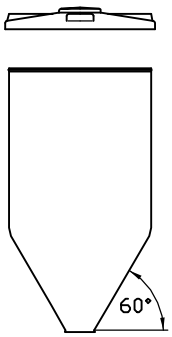

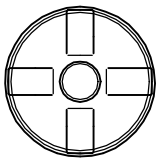

OTRE PE

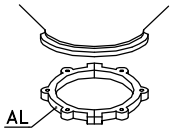

CS 3

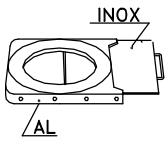

GH 3

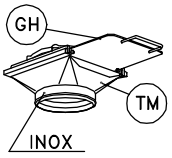

TM 3

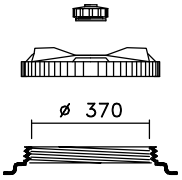

CPF 410

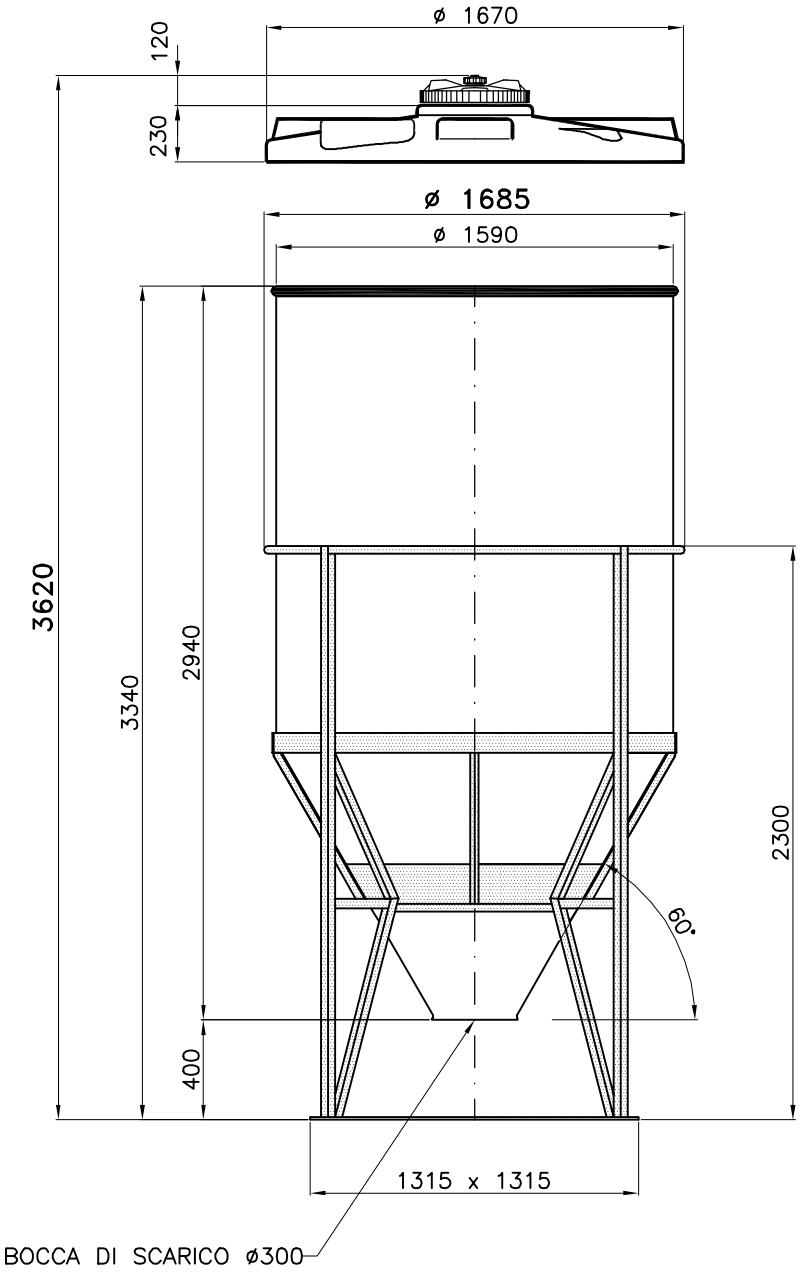

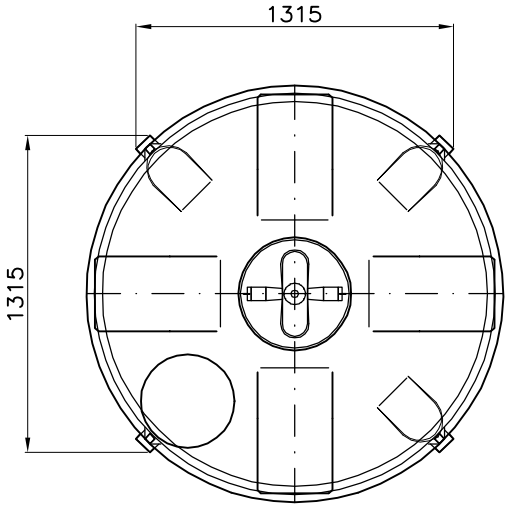

Tel. 035/844060 ASTRO Fax 035/844646