dis. 3547 AS

TCO 151/4 – LT. 15.350

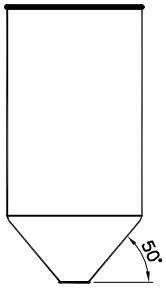

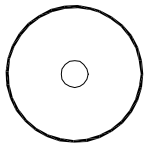

OTRE PE

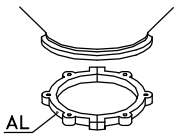

CS 4

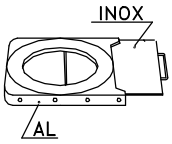

GH 4

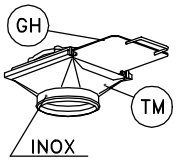

TM 4

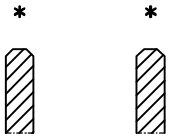

Inforcamento
a vuoto

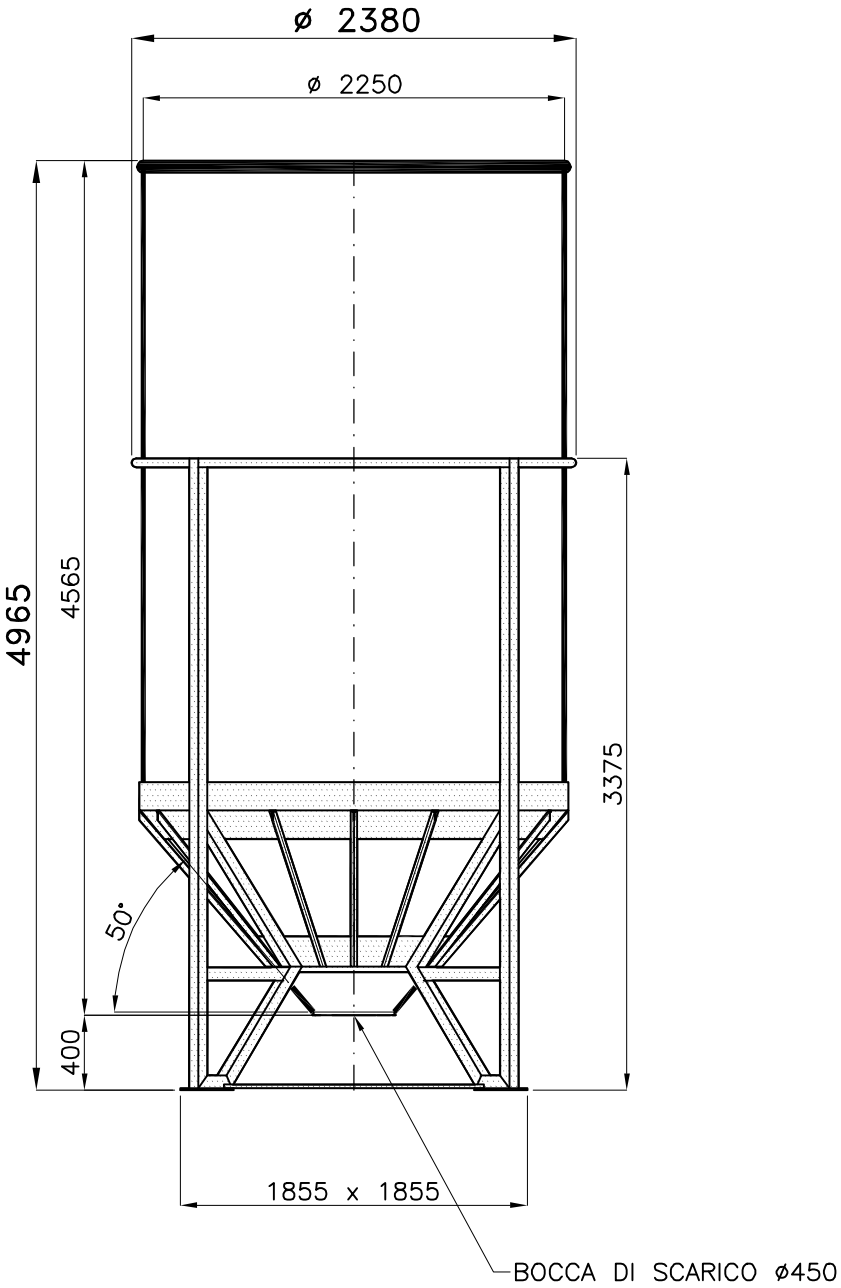

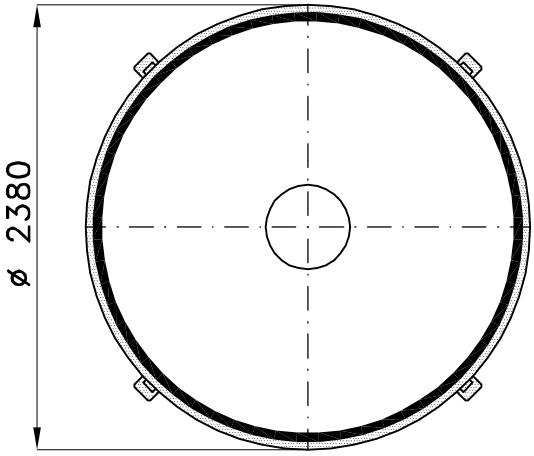

SL – 06.07.09 – ..\–disegni standard\tco\polveri\a151_4

Tel. 035/844060 ASTRO Fax 035/844646