dis. 3543 AS

TCO 131/4 – LT. 13.000

SL – 06.07.09 – ..\–disegni standard\tco\polveri\a131_4

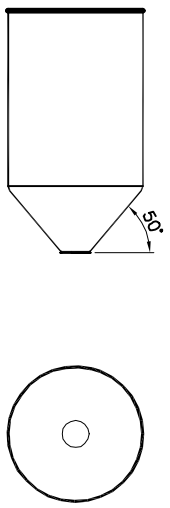

OTRE PE

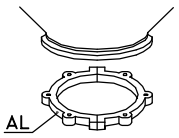

CS 4

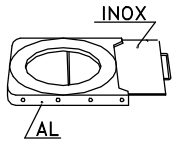

GH 4

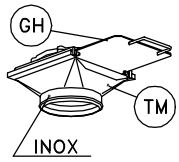

TM 4

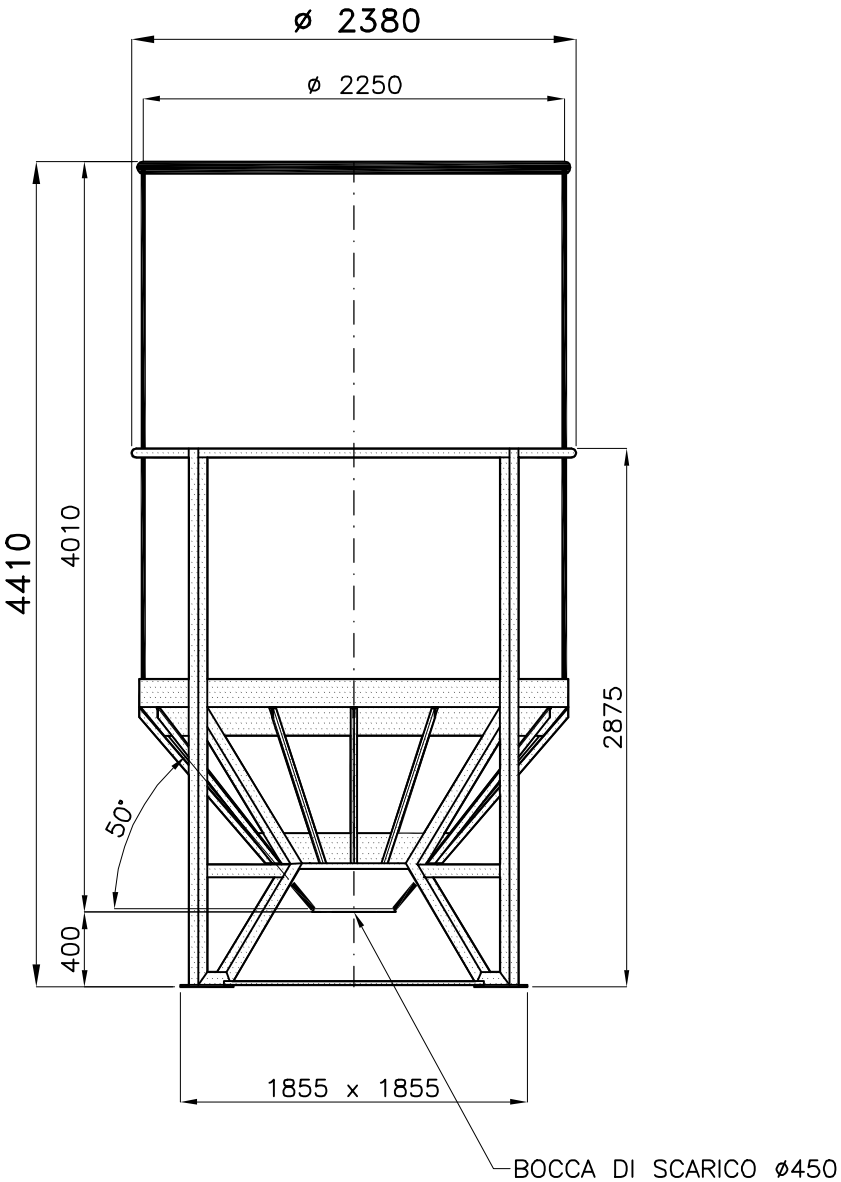

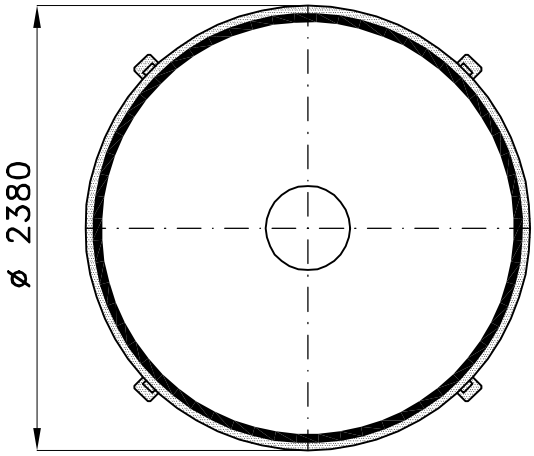

Tel. 035/844060 ASTRO Fax 035/844646