dis. 3541 AS

TCO 131/2 – LT. 13.000

SL – 06.07.09 – ..\-disegni standard\tco\polveri\a131_2

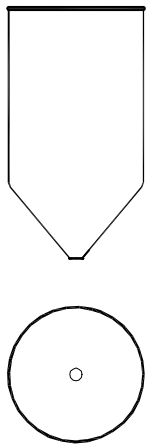

OTRE PE

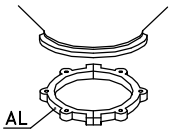

CS 2

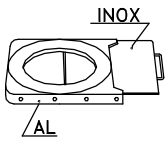

GH 2

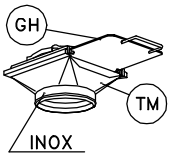

TM 2

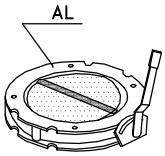

V2FS

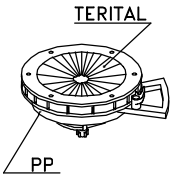

DF 2

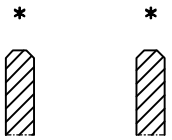

Inforcamento
a vuoto

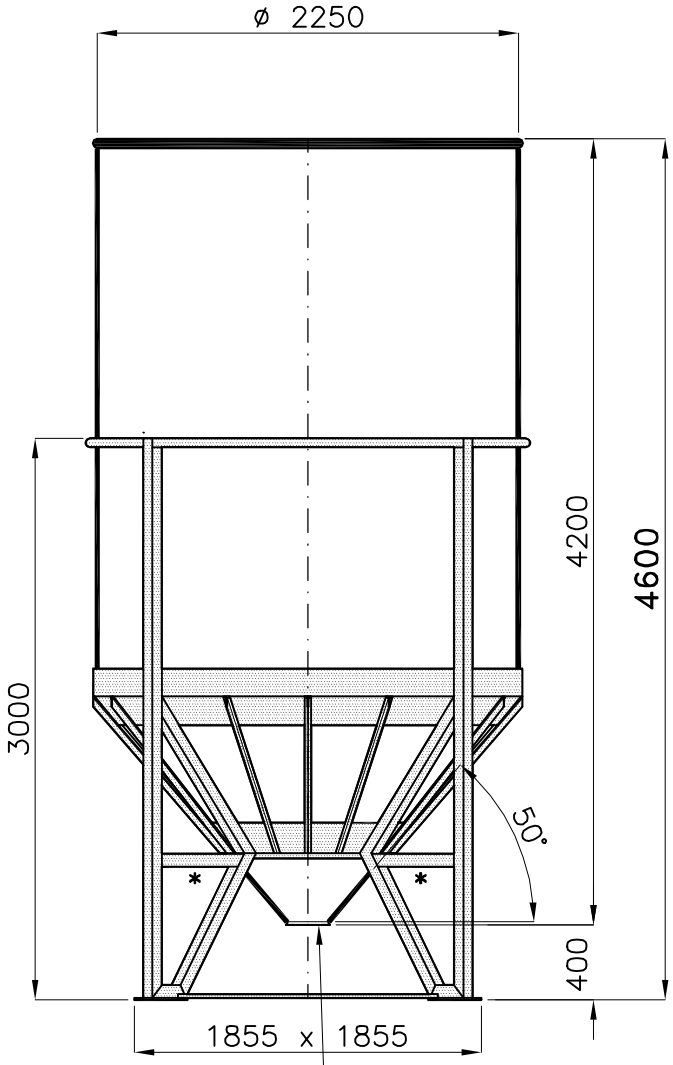

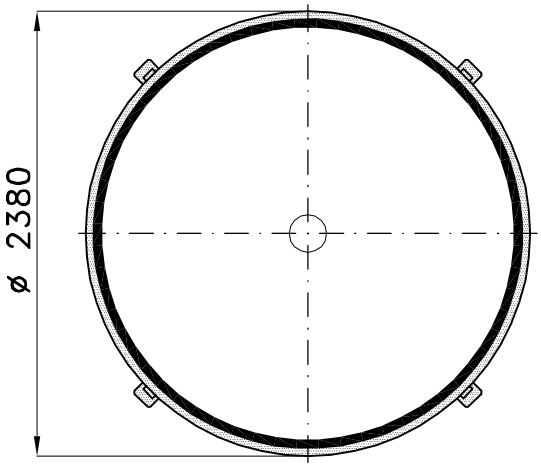

Tel. 035/844060 ASTRO Fax 035/844646