dis. 3540 AS

TCO 121/4 – LT. 12.350

SL – 03.07.09 – ..\–disegni standard\tco\polveri\a121_4

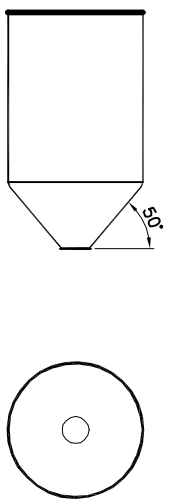

OTRE PE

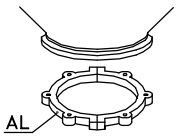

CS 4

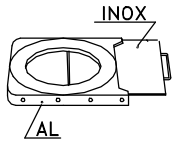

GH 4

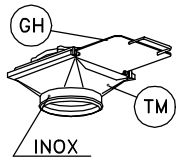

TM 4

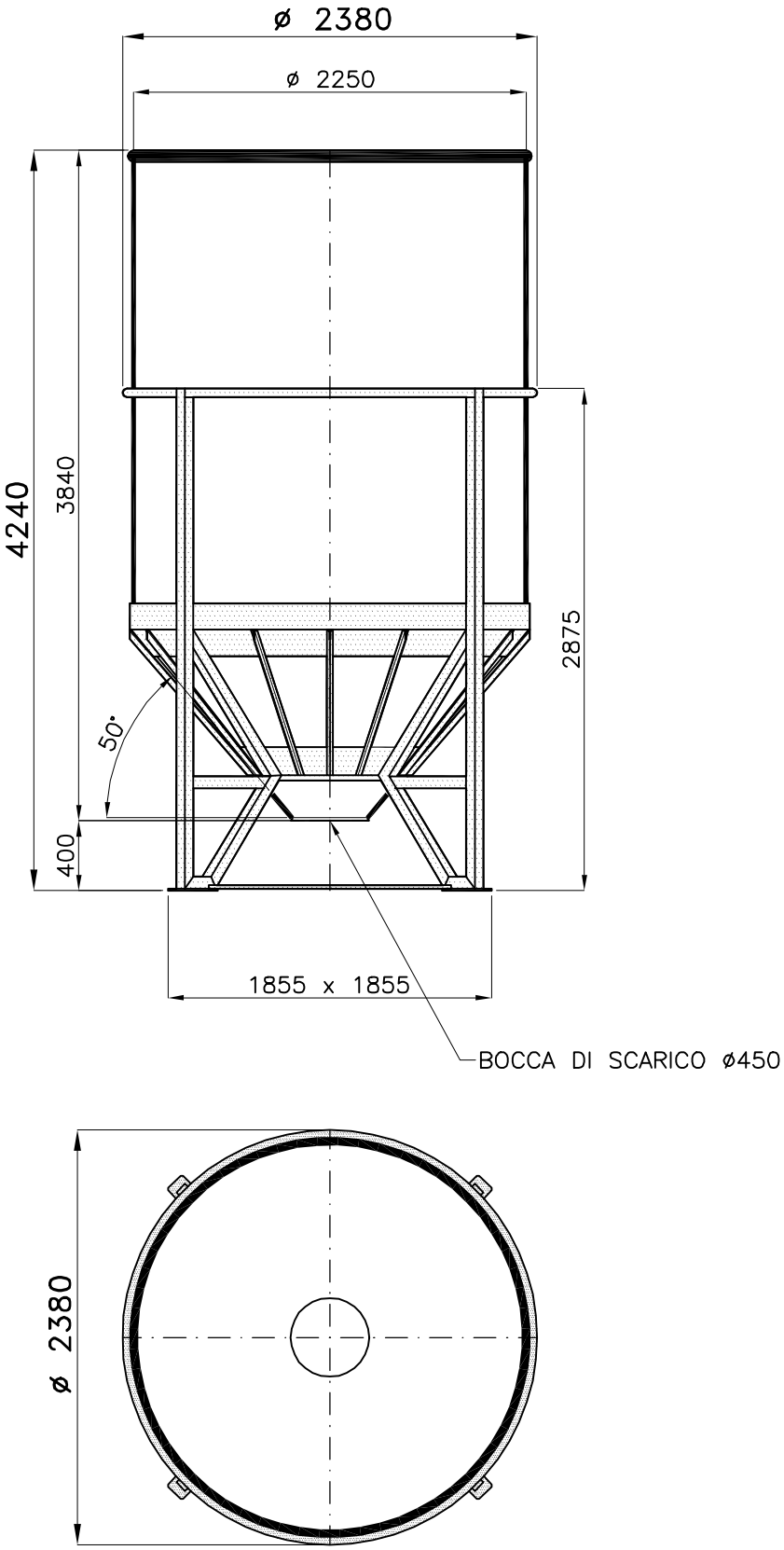

Tel. 035/844060 ASTRO Fax 035/844646