dis. 3539 AS

TCO 121/3 – LT. 12.350

SL – 03.07.09 – ..\–disegni standard\tco\polveri\a121_3

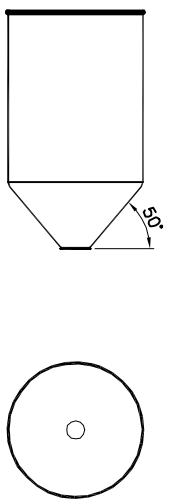

OTRE PE

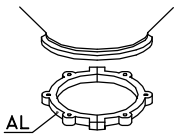

CS 3

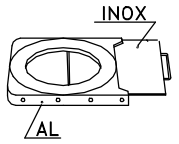

GH 3

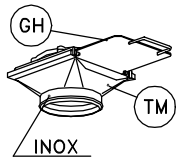

TM 3

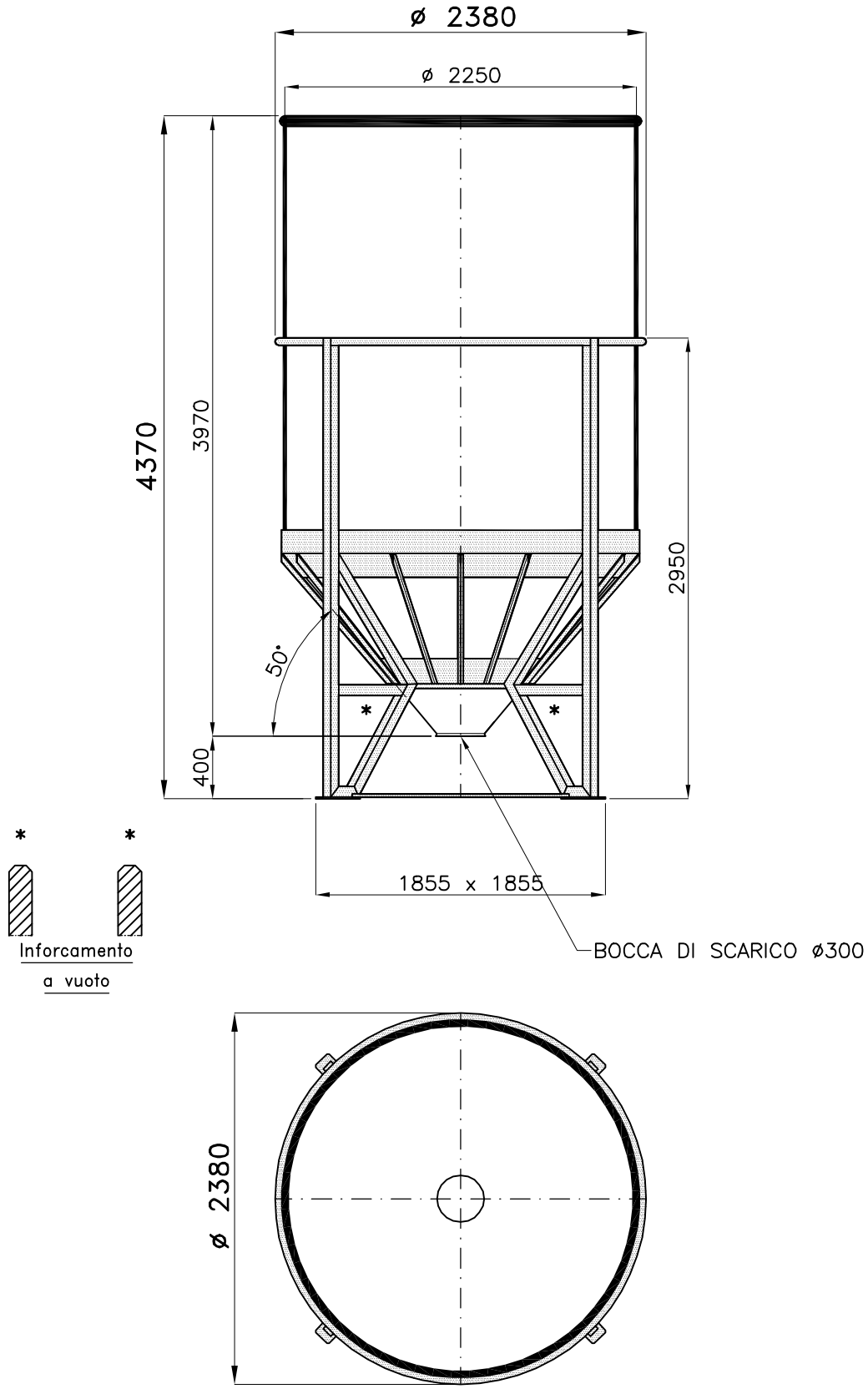

Tel. 035/844060 ASTRO Fax 035/844646