dis. 3537 AS

TCO 103/4 – LT. 10.000

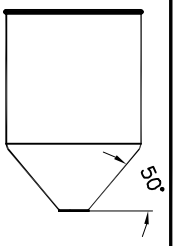

OTRE PE

LT. ~8300

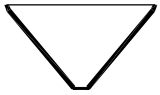

LT. ~1700

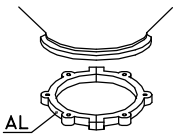

CS 4

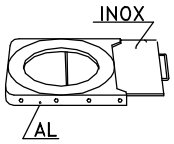

GH 4

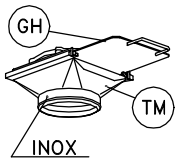

TM 4

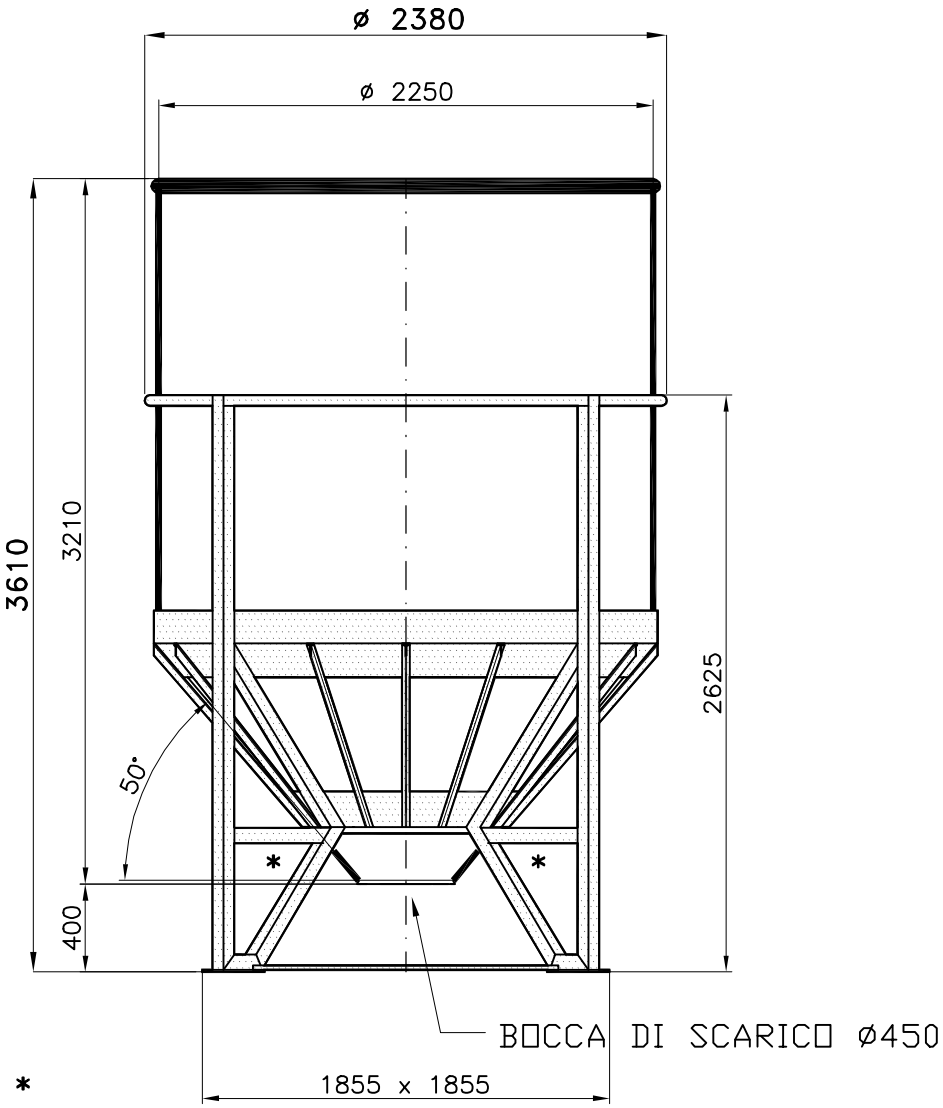

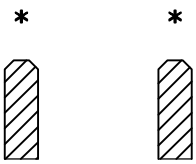

Inforcamento a vuoto

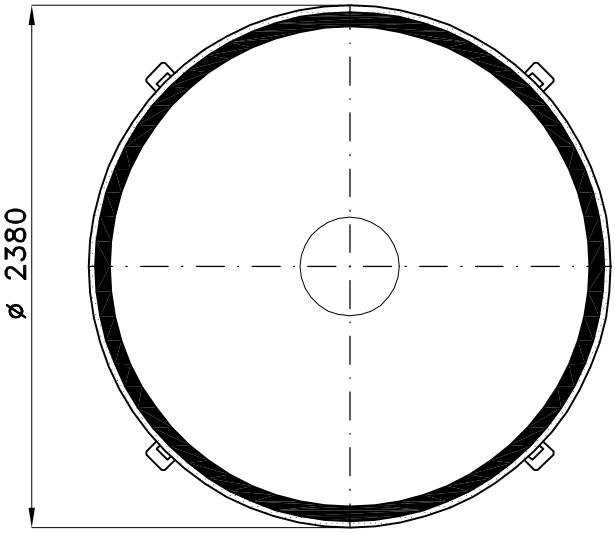

Tel. 035/844060 ASTRO Fax 035/844646

SL – 02.07.09 – ..\–disegni standard\tco\polveri\a103_4