dis. 3535 AS

TCO 50/4 – LT. 5.100

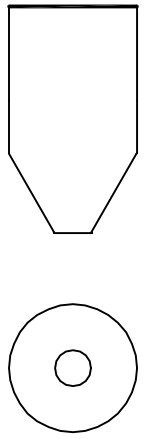

OTRE

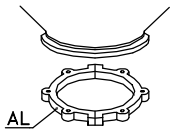

CS 4

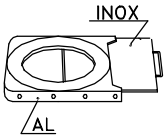

GH 4

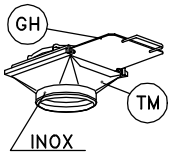

TM 4

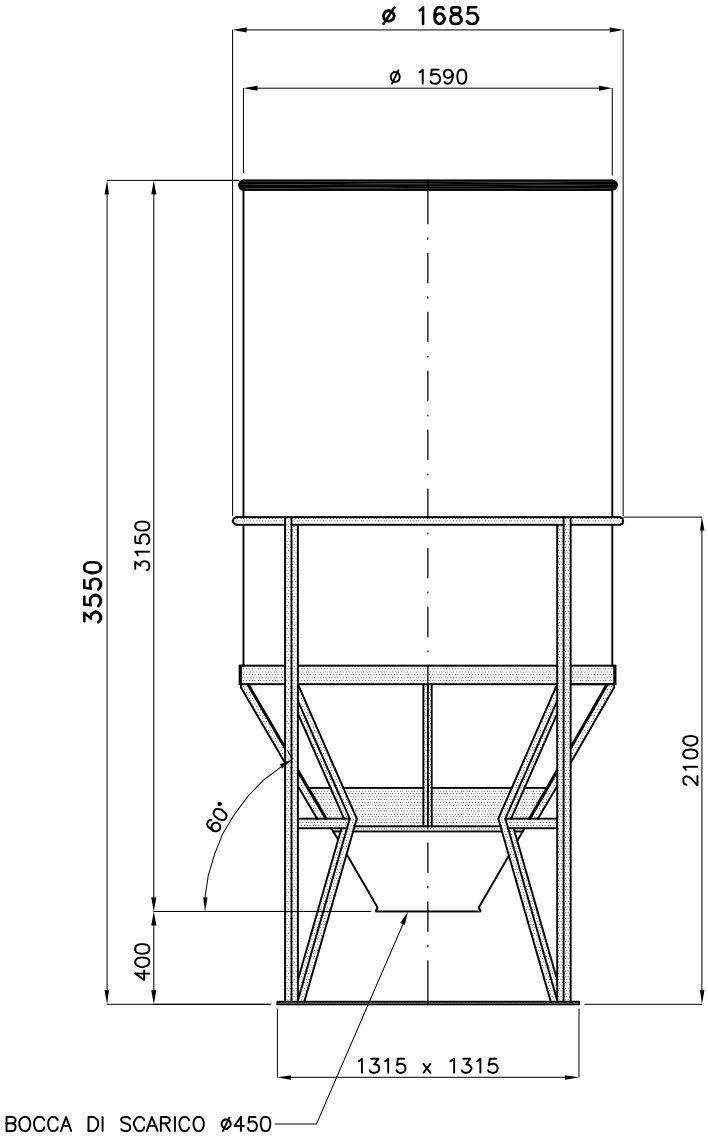

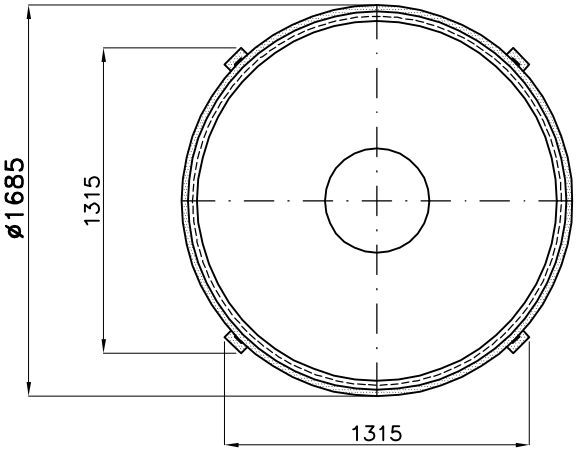

Tel. 035/844060 ASTRO Fax 035/844646

SL – 01.07.09 – ..\–disegni standard\tco\polveri\a50_4