dis. 3534 AS

TCO 45/4 – LT. 4.500

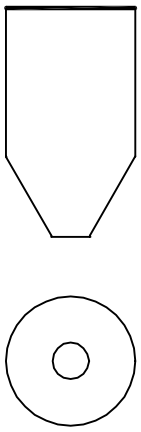

OTRE

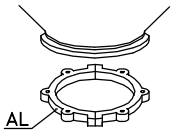

CS 4

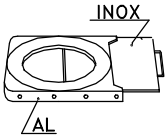

GH 4

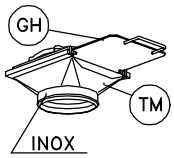

TM 4

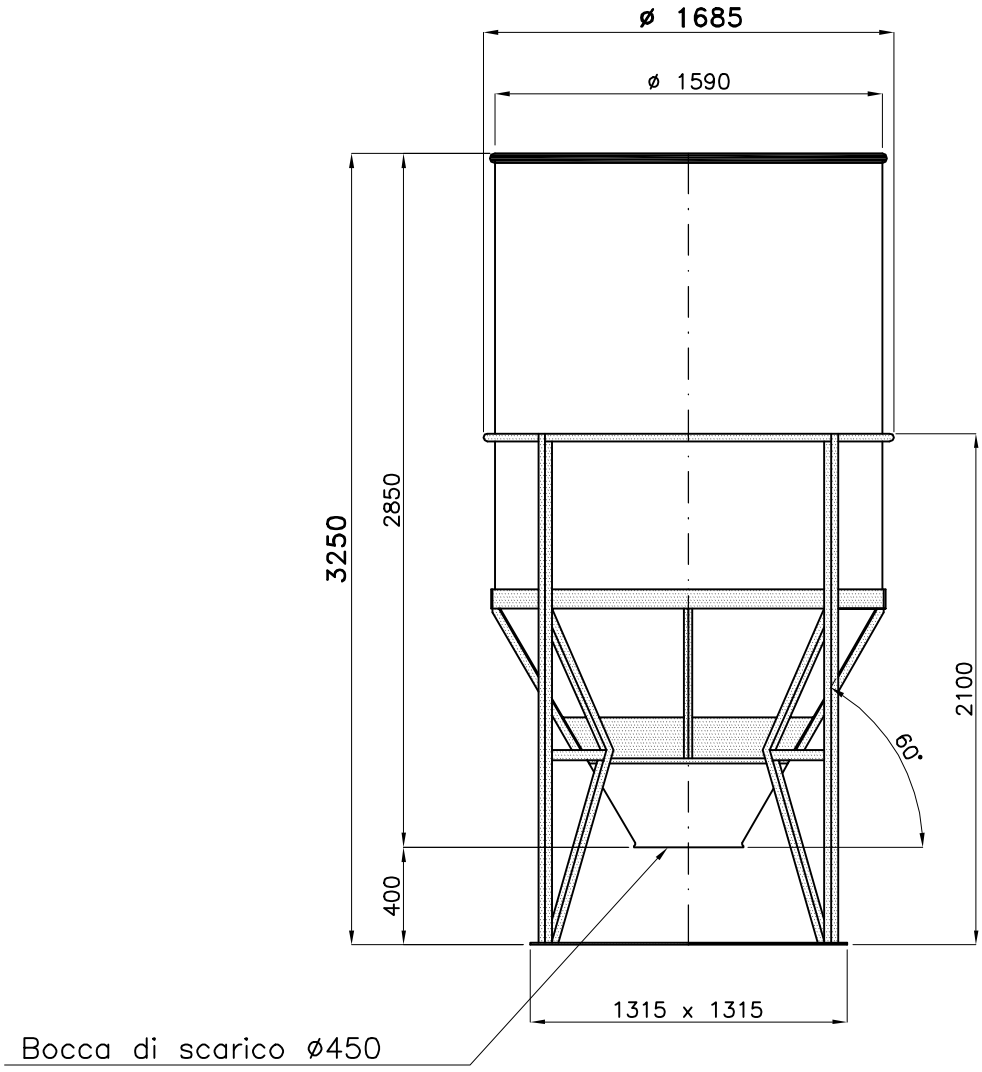

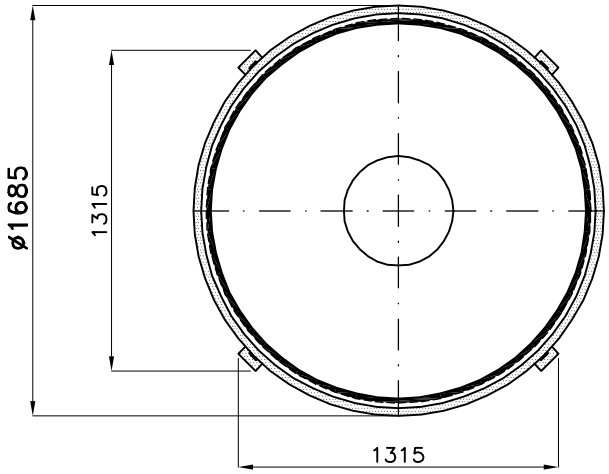

Tel. 035/844060 ASTRO Fax 035/844646

SL – 01.07.09 – ..\-disegni standard\tco\polveri\a45_4