S.L. - 29.06.09 - ..\disegni\tco\a32-3st

dis. 3533 AS

TCO 32/3 - LT. 3.200

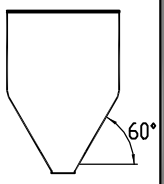

OTRE PE

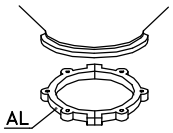

CS 3

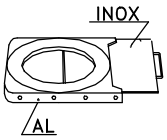

GH 3

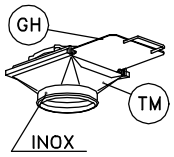

TM 3

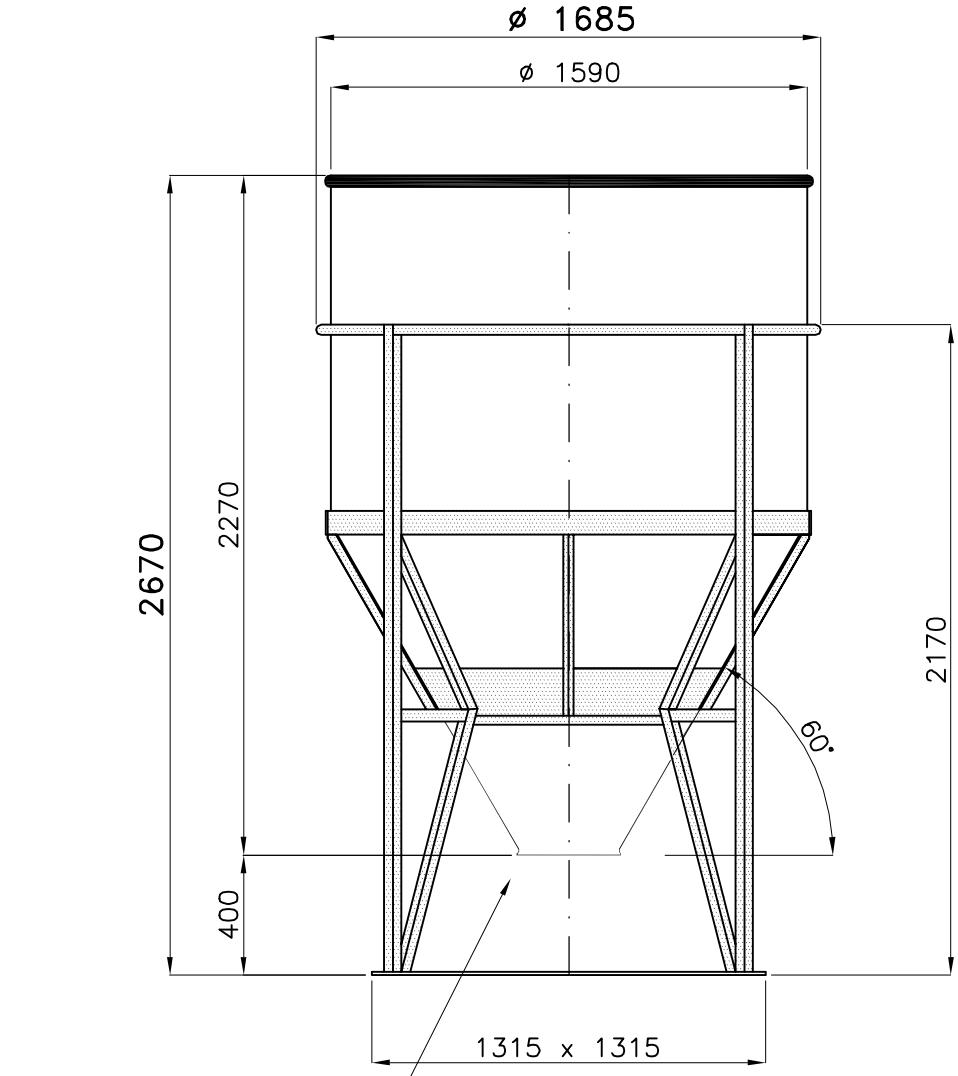

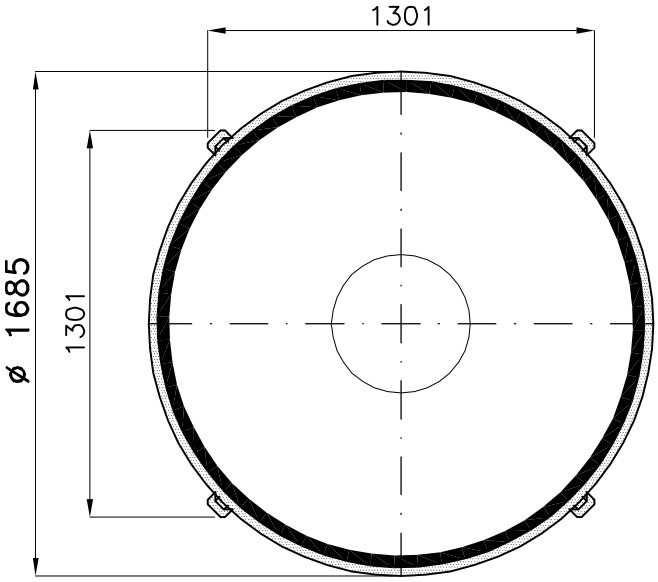

Tel. 035/844060 ASTRO Fax 035/844646