dis. 3531/1 AS

TCC 16/4 – LT. 1.500

SFIATO

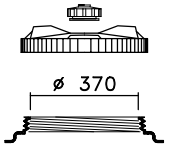

CPF 410 + SF1

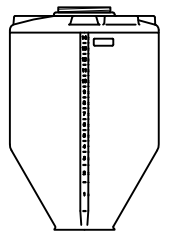

OTRE

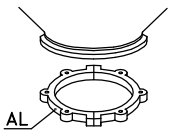

CS 4

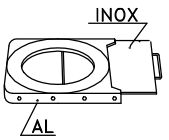

GH 4

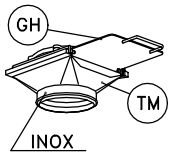

TM 4

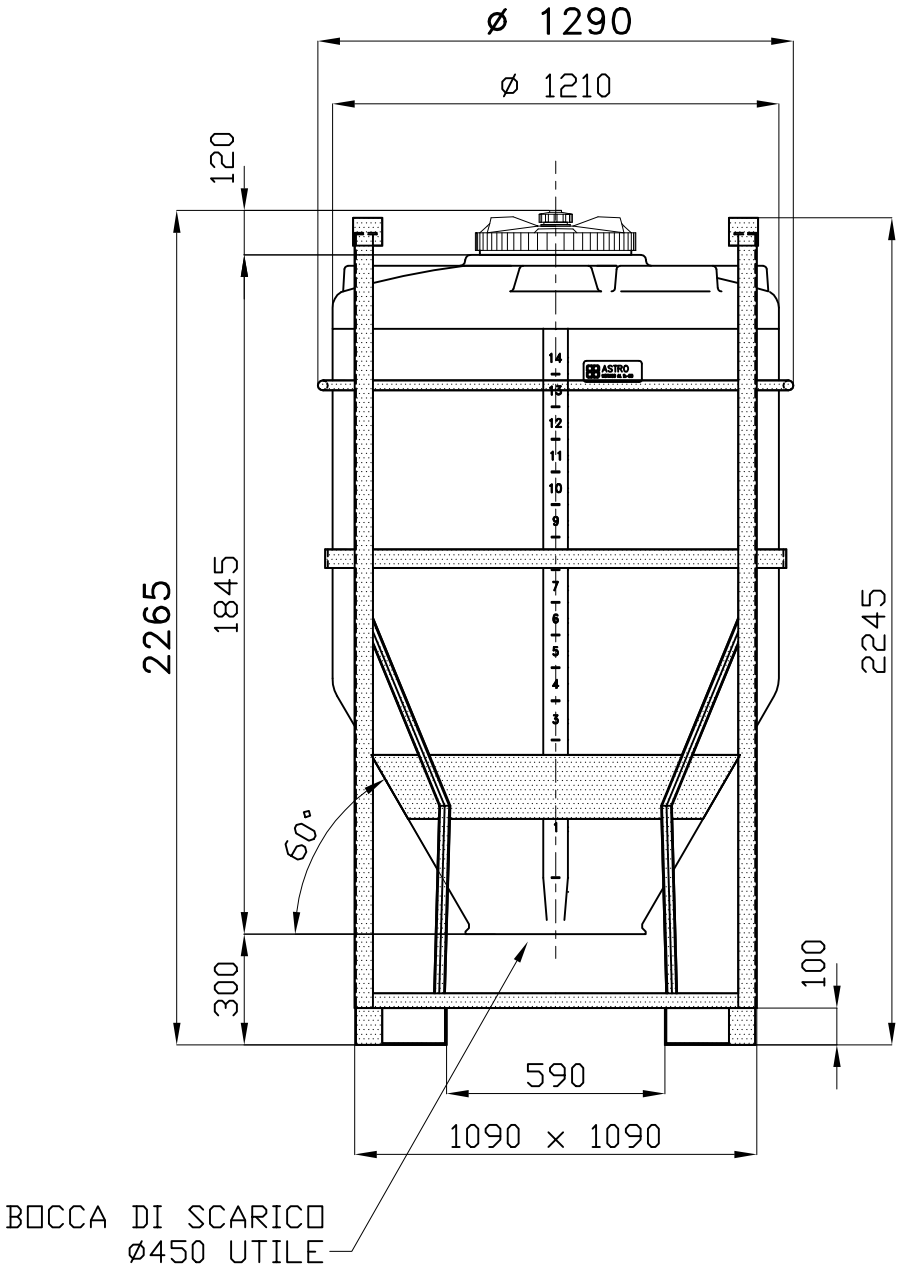

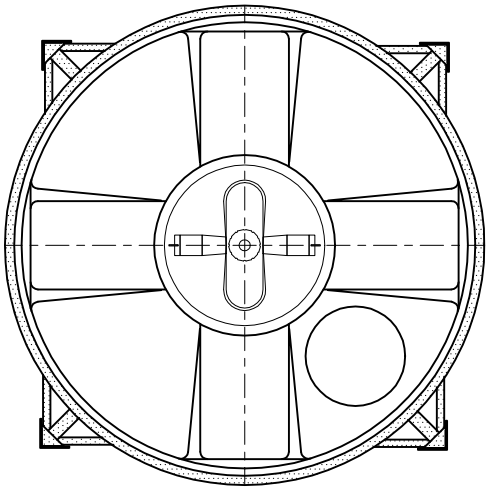

SL – 07.08.08 – ..\disegni\–disegni std\tcc\polveri\a16_4

01: STEFANO_S. – 17.03.10 – H.TOTALE e H TELAIO +75mm

Tel. 035/844060 ASTRO Fax 035/844646