dis. 3530/01 AS

TCC 16/3 – LT. 1.500

SFIATO

CPF 410 + SF1

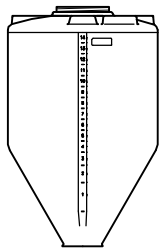

OTRE

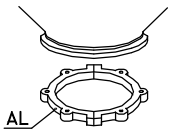

CS 3

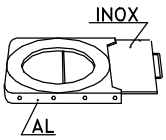

GH 3

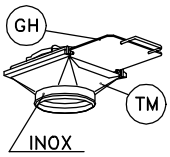

TM 3

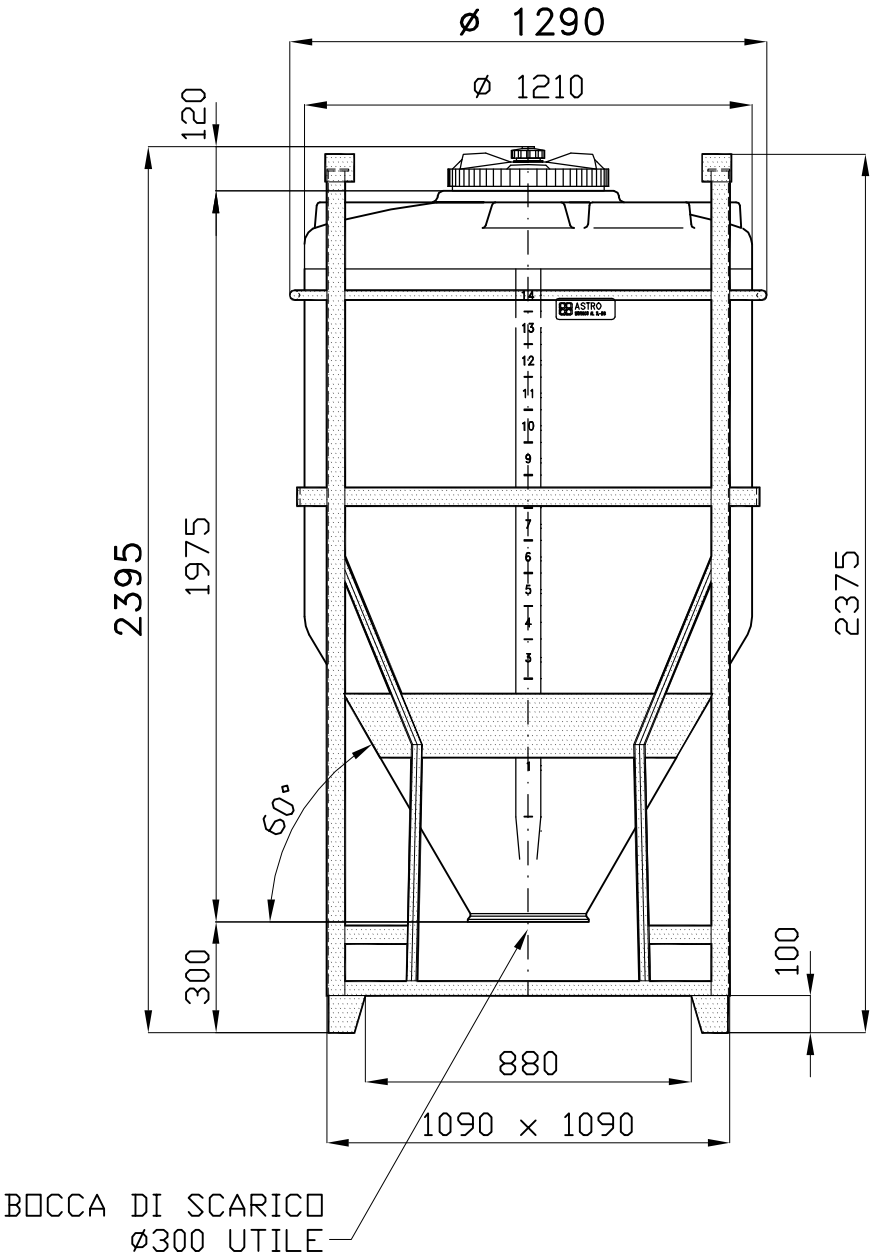

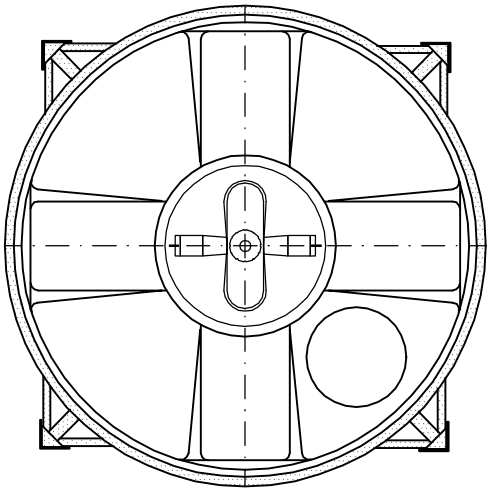

SL – 07.07.08 – ..\disegni\–disegni std\tcc\polveri\a16_3

01: SL – 04.03.10 – H.TOTALE e H TELAIO +75mm

Tel. 035/844060 ASTRO Fax 035/844646