dis. 3529/1 AS

TCC 16/2 – LT. 1.500

SFIATO

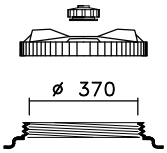

CPF 410 + SF1

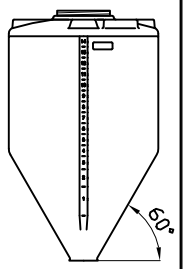

OTRE

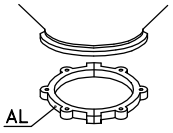

CS 2

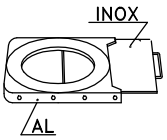

GH 2

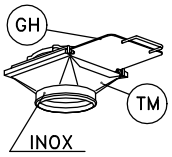

TM 2

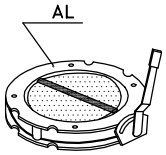

V2FS

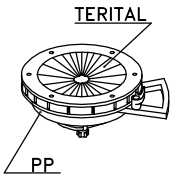

DF 2

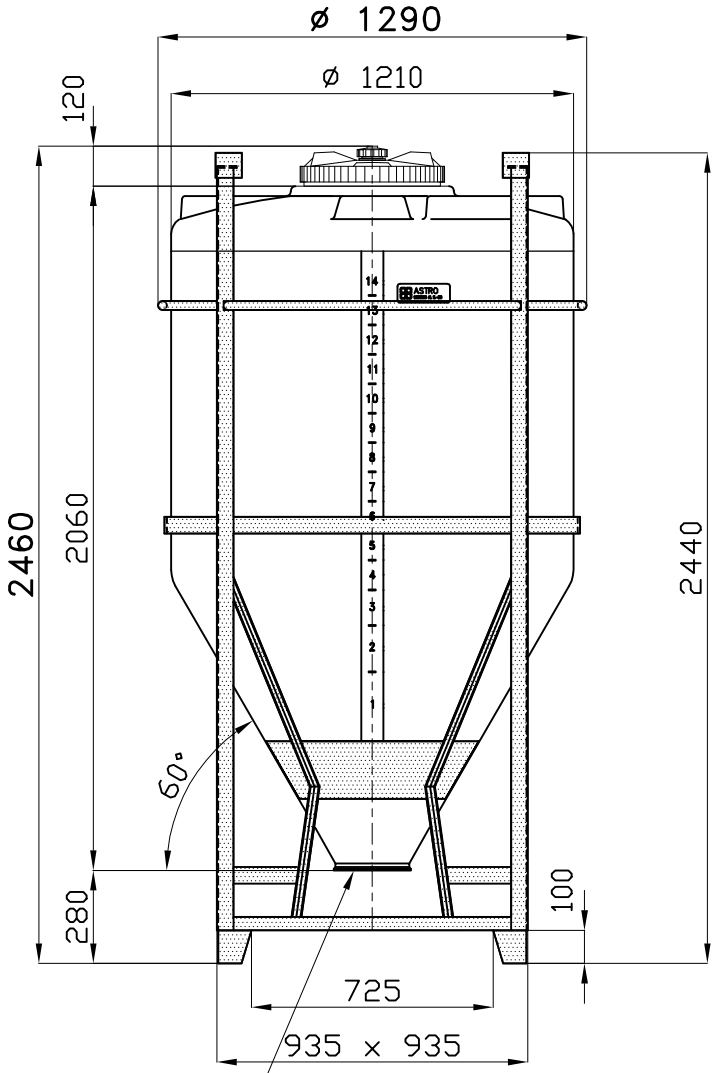

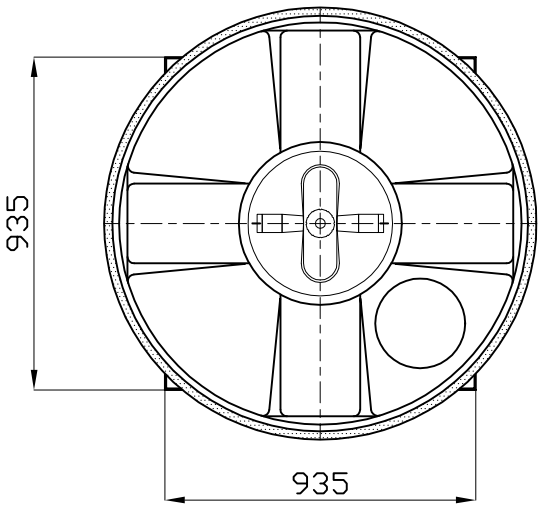

SL – 06.0808 – ..\disegni\–disegni std\tcc\polveri\a16_2

01: STEFANO_S. – 17.03.10 – H.TOTALE e H TELAIO +80mm

Tel. 035/844060 ASTRO Fax 035/844646