G.M. tca\a25_3

dis. 3360/1 AS

TCA 25/3 – LT. 2.450

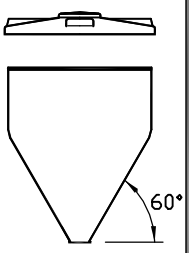

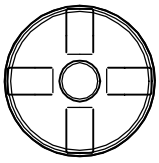

OTRE PE

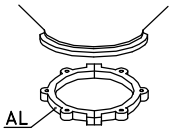

CS 3

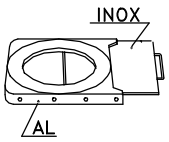

GH 3

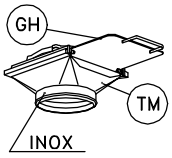

TM 3

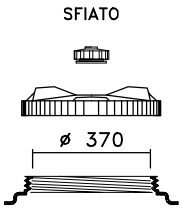

CPF 410
(optional)

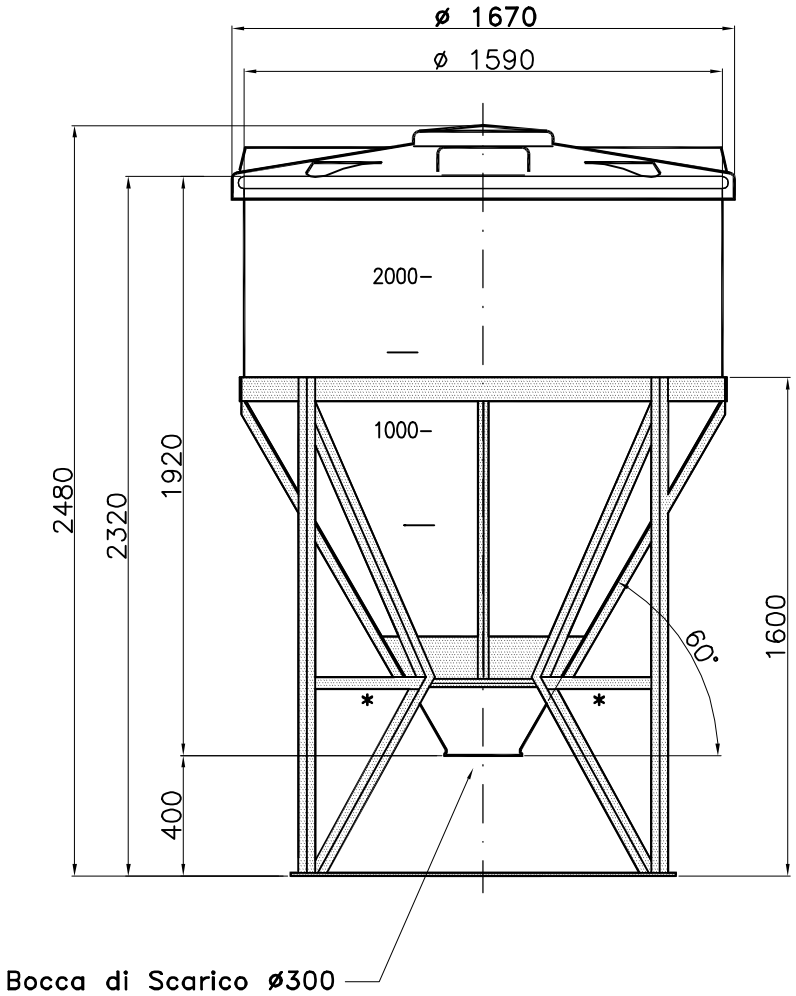

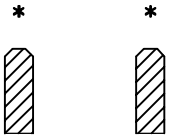

Inforcamento
a vuoto

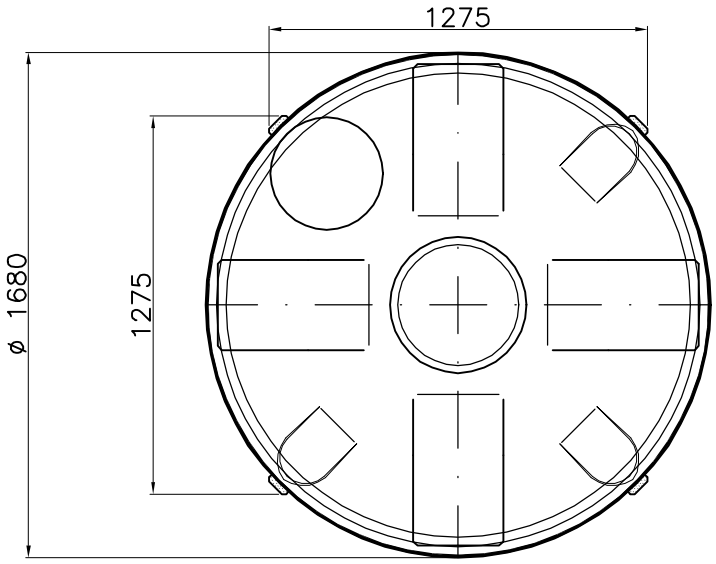

01)M.M.–10.07.07–aggiornatoa testata

Tel. 035/844060 ASTRO Fax 035/844646