tca\a5_3-st M.G.

TCA 5/3 – LT. 500

SFIATO

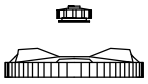

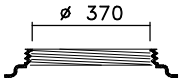

CPF 410
(optional)

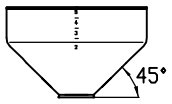

OTRE

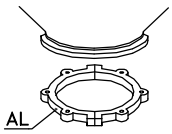

CS 3

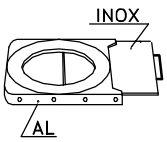

GH 3

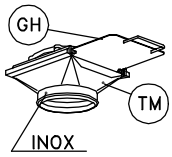

TM 3

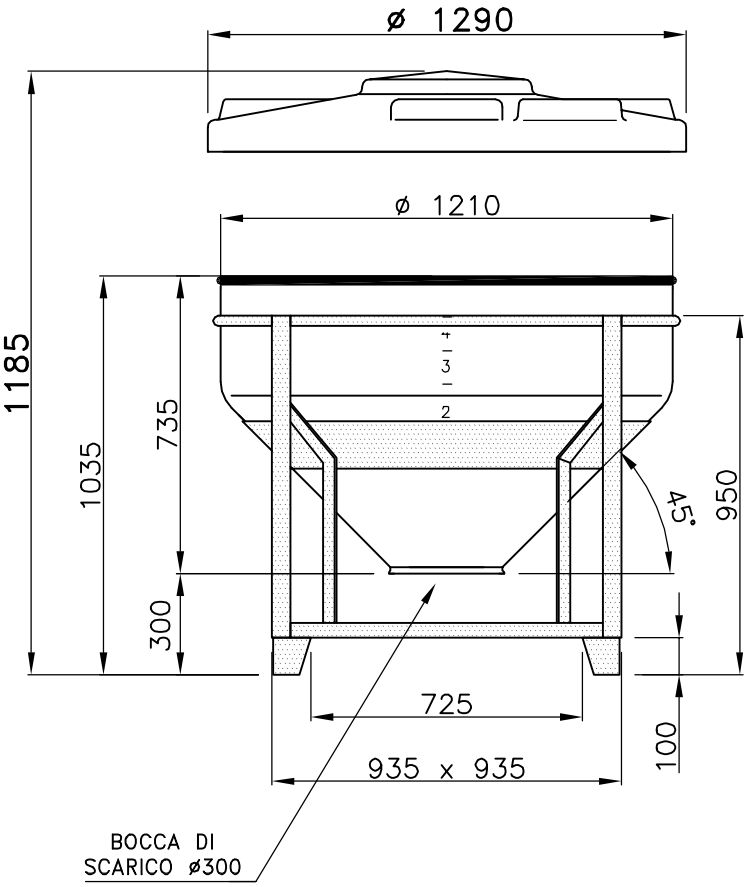

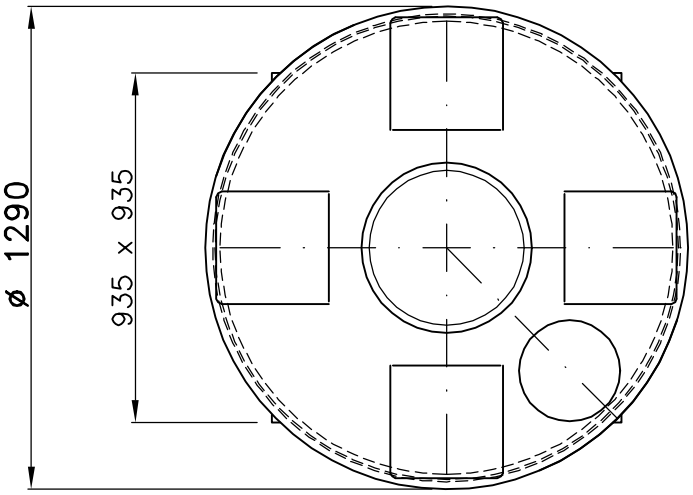

Tacche Livello

02)M.M.-02/05/07-agg. sfiato

dis. 3201/2

Tel. 035/844060 ASTRO Fax 035/844646