tco\a21l-st

TCO 21/L – LT. 1.900

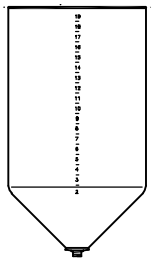

OTRE

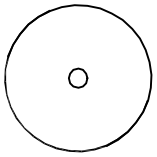

SCARICO

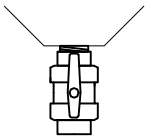

VERTICALE

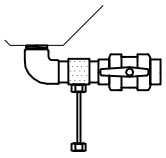

ORIZZONTALE

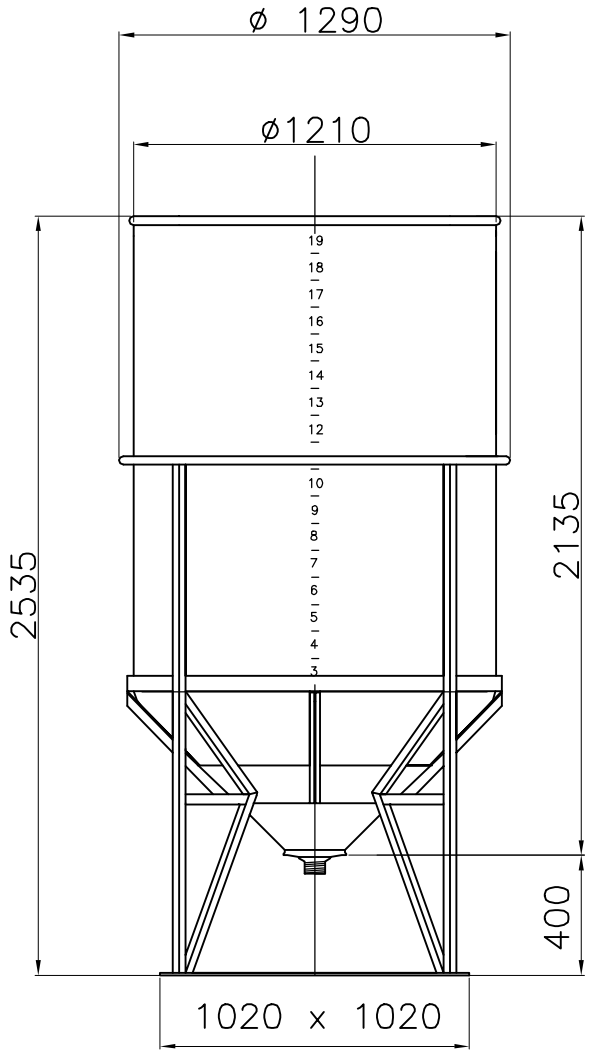

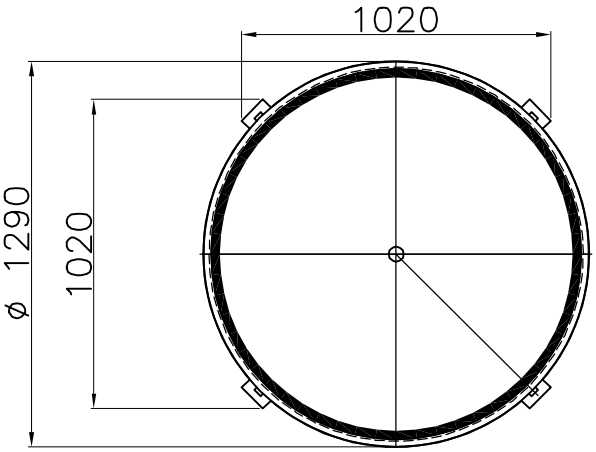

01)M.M. – 08/01/07 – Aggiornato Telaio

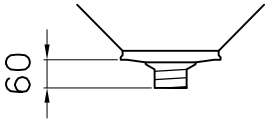

USCITA FILETTATA MASCHIO GAS : ø 1" – 1¼" – 1½" – 2" – 2½" – 3" – 4"

2978/1 AS

Tel. 035/844060 ASTRO Fax 035/844646