tcc\a21_3

dis. 2972/02 AS

TCC 21/3 – LT. 2000

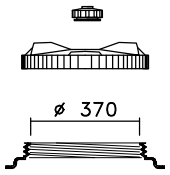

CPF 410 + SF1

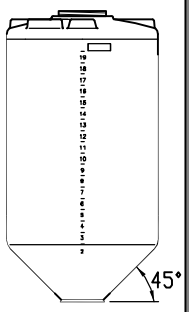

OTRE

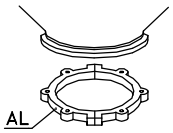

CS 3

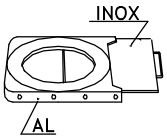

GH 3

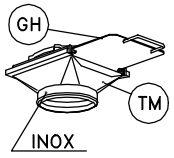

TM 3

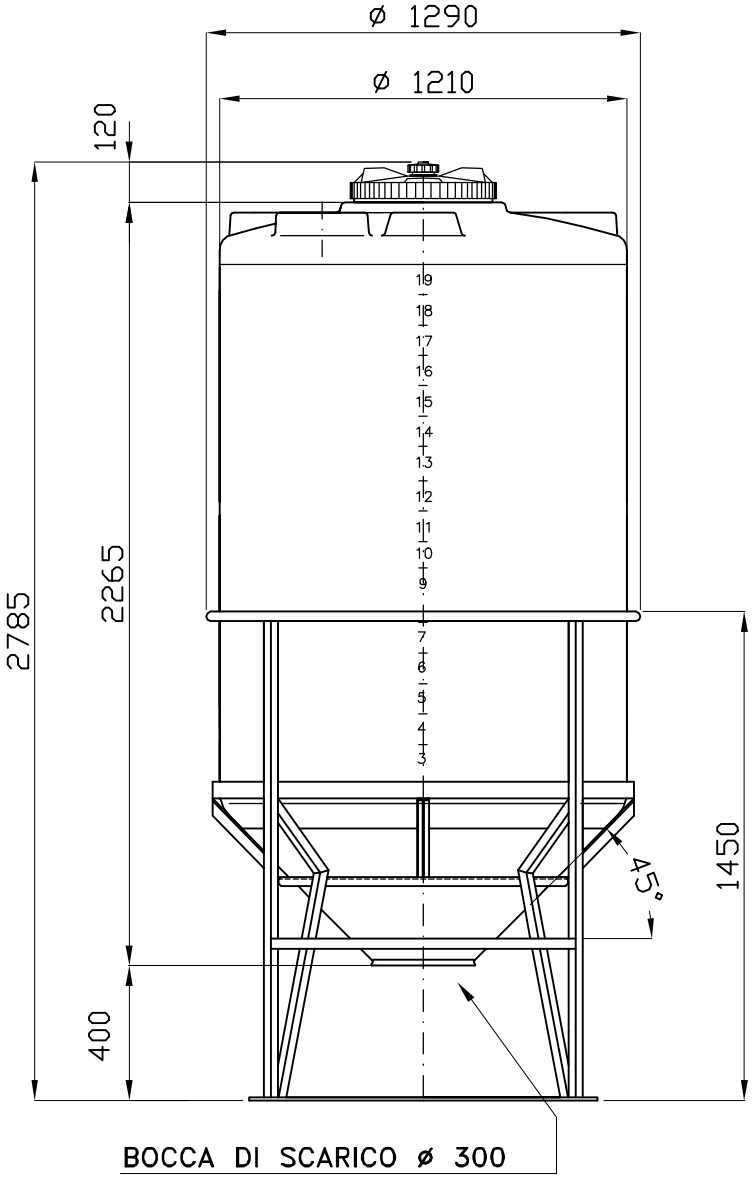

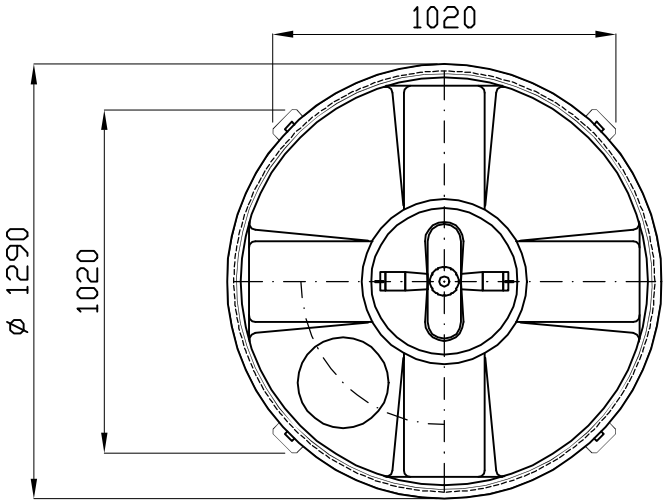

02: SL – 12.06.09 – SCALA 1:1; TELAIO

Tel. 035/844060 ASTRO Fax 035/844646