TCO\Tco 50_3

dis. 2902/01 AS

TCO 50/3 – LT. 5.100

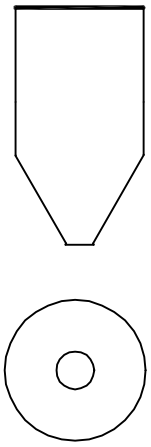

OTRE

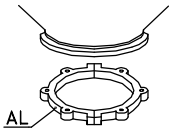

CS 3

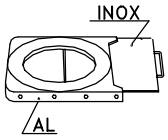

GH 3

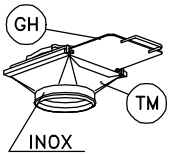

TM 3

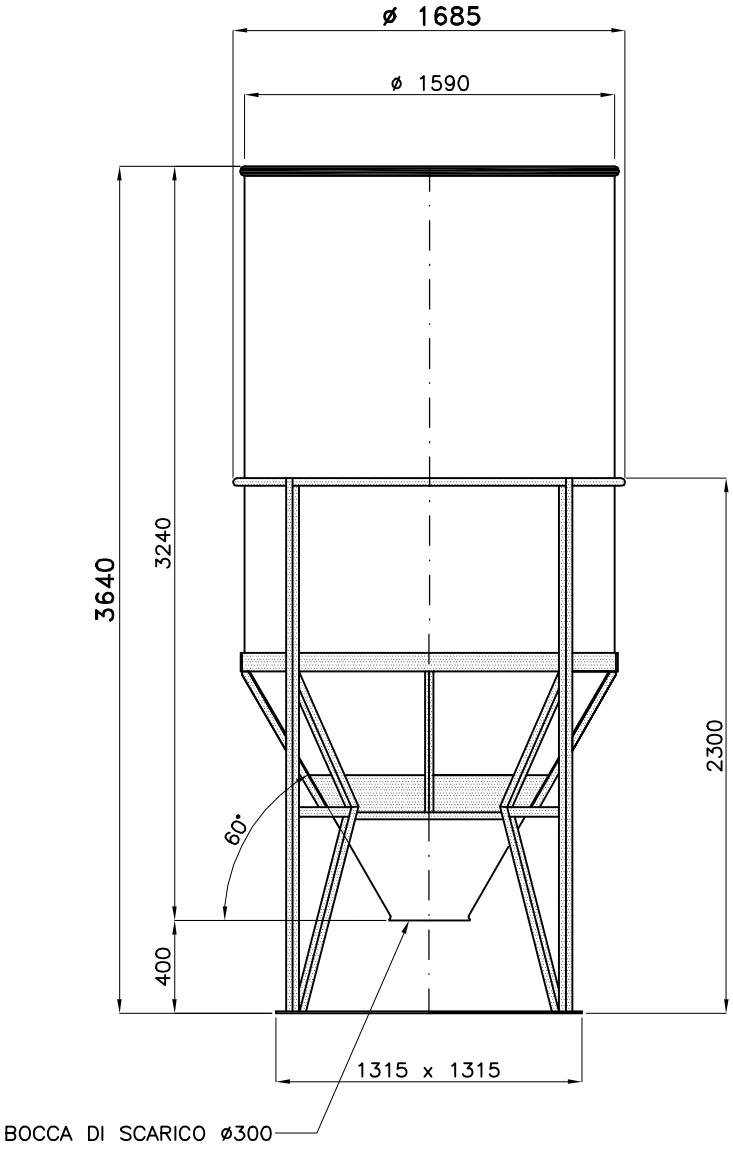

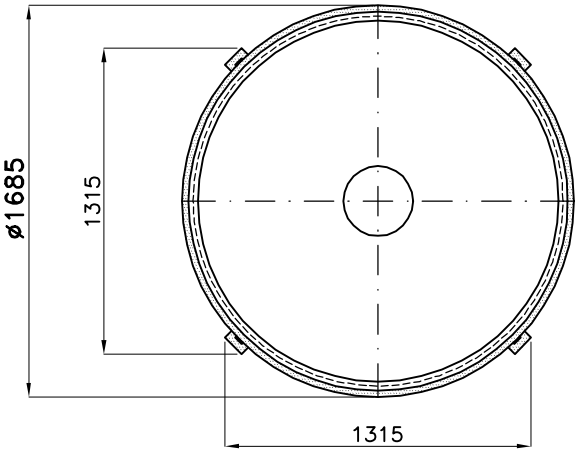

01: SL – 01.07.09 – TELAIO; SCALA 1:1

Tel. 035/844060 ASTRO Fax 035/844646