TCO\Tco 45_3

dis. 2901/01 AS

TCO 45/3 – LT. 4.500

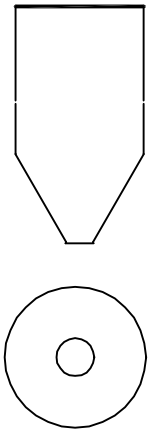

OTRE

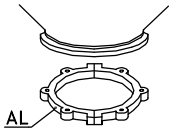

CS 3

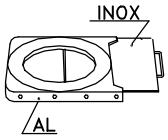

GH 3

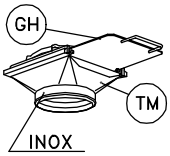

TM 3

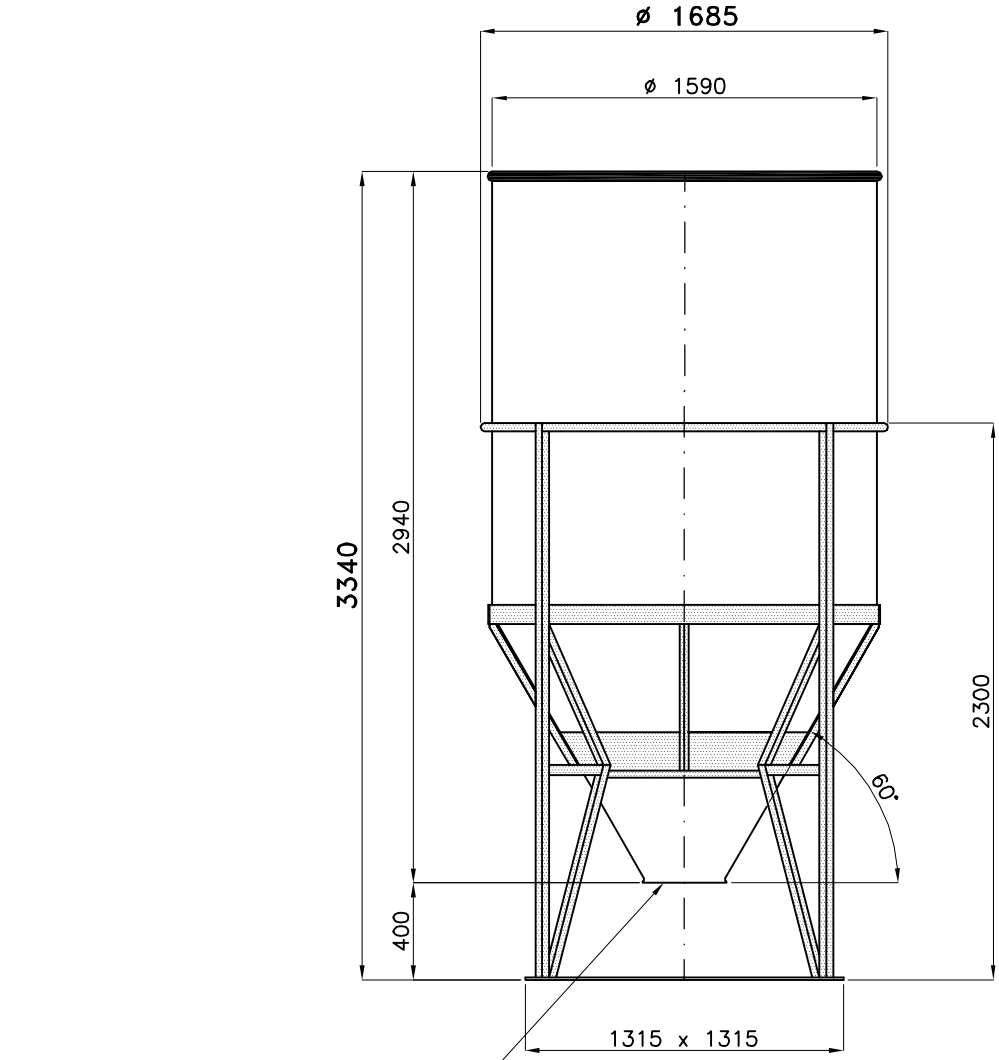

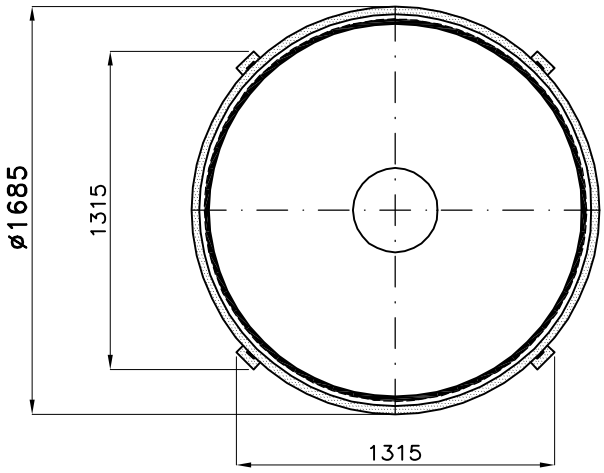

T/112.1879

01: SL – 29.06.09 – TELAIO; SCALA 1:1

Tel. 035/844060 ASTRO Fax 035/844646